CPAH

COLUMBUS PAYLOAD ACCOMMODATION HANDBOOK

ATTACHED PRESSURIZED MODULE (APM)

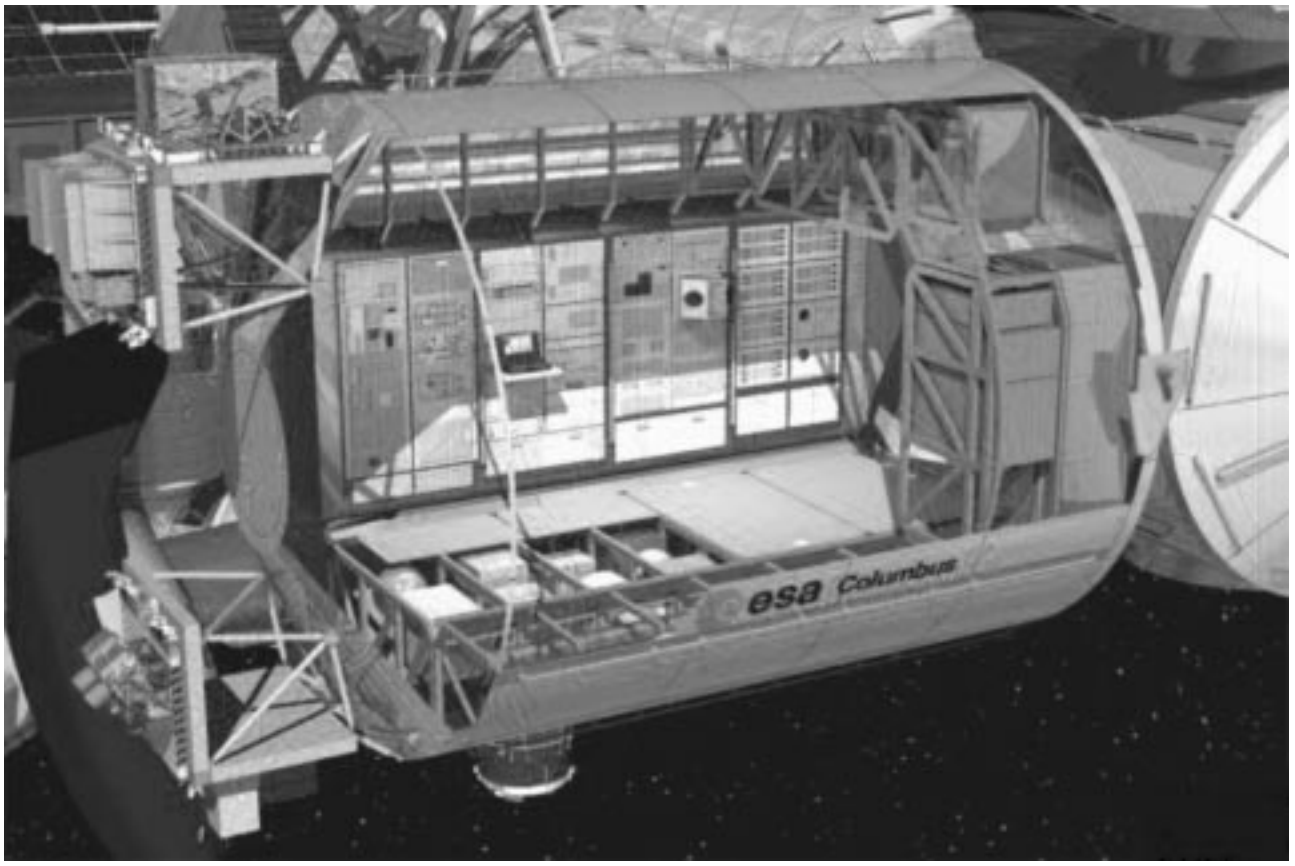

DaimlerChrysler Aerospace, Bremen – All Rights Reserved – Copyright per DIN 34

Dokument Typ:
Document Type: Handbook

Titel:
Title:

COLUMBUS PAYLOAD ACCOMMODATION HANDBOOK

Lieferbedingungs-Nr.: DRL/DRD No.:	MS–ESA–DRD–ENG–15A	**Klassifications Nr.:** Classification No.:	N/A
Produktgruppe: Product Group:	N/A	**Konfigurationsteil-Nr.:** Configuration Item No.:	N/A
Schlagwörter: Headings:	Payload Accommodation	**Produktklassifizierungs-Nr.:** Classifying Product Code:	N/A
		Freigabe Ordnungs-Nr.: Release Order No.:	

Bearbeitet: Prepared by:	PL Engineering Team	**Abteilung:** Department:	RIO21/22	**Firma:** Company:	DASA – RI
Geprüft: Agreed by:	G. Schmidt	**Abteilung:** Department:	RIO21	**Firma:** Company:	DASA – RI
Genehmigt: Approved by:		**Abteilung:** Department:		**Firma:** Company:	DASA – RI
Genehmigt: Approved by:		**Abteilung:** Department:		**Firma:** Company:	

DaimlerChrysler Aerospace, Bremen – All Rights Reserved – Copyright per DIN 34

DOCUMENT CHANGE RECORD

Issue / Revision	Date	Affected Section	Reason for Change / Brief Description for Change
Draft E	28.02.97	1.2	extension
		3.1.5	update figure
		3.1.7	update chapter – Columbus Attached Pressurized Module
		3.1.10	editorial
		3.2	update table 3.2–1
		3.2.1	update section – ISPR Utility Interface figure
		3.4	update figure – Categorization of Payloads
		3.4.3	new section – Data Dissimilation
		3.4.4	update section – Safety
		4.	editorial on tables
		4.1.1	new section – APM Coordinate System
		4.1.2	update section – APM to ISPR UIP Layout figure
		4.2	table 4.2–1 changed; SUP description update
		4.3.1	update section – Environmental Control
		4.3.2	editorial
		4.3.3	editorial
		4.3.3.1	update section – Audio Communication
		4.3.3.2	update section – Video Communication
		4.3.3.3	update section – Data Communications
		4.3.4.1	update figure APM DMS configuration
		4.3.4.3	update section – APM Payload Bus
		4.3.4.4	update section – HCI and Crew Services
		4.3.5	update section – Payload Operation Execution Support
		4.5	update section – Ground Support Equipment
		5.1.1	update section – ISPR
		5.1.1.4	update section – Front Panel Provisions
		5.1.1.5	new section –Close Outs
		5.2	update section – Payload Thermal Heat Removal
		5.2.1.1	update section – Moderate Temperature
		5.2.2.1	update section – Heat Flux
		5.3	update section – Vacuum/Venting Schematic
		5.5	editorial
		5.5.2	update section – Auxiliary Power
		5.5.1	update section – Power Distribution to Payloads
		5.5.2	update section – Safing Power
		5.6.1	update section – General Description
		5.6.2	update and rearrangement section/ integration of old section 5.6.3
		5.6.2.2.1	new section – CCSDS Routing Service
		5.6.2.2.2	new section – CCSDS Packet Generation
		5.6.2.9	new section – RT Protocol Support
		5.6.2.10	new section – APT Protocol Support
		5.6.3	update section – DMS General Description
		5.6.4	update section – Payload Interface to LAN
		5.6.5	update section – MMU Data Storage and Retrieval
		5.6.6	update and rearrangement section / integration of old section 5.6.8
		5.6.7	update section – Requirements to Payload Laptops
		5.7.1	update section – Video Provisions for Payloads
		5.7.2	update section – Video/ Data Processing Unit
		5.7.3	update section – Video Recorder
		5.7.4	update section – Video Monitor
		5.7.5	update section – Video Camera Assembly
		5.7.6	update section – User Interface
		5.7.7	new section – ESA dedicated Video
		5.7.8	new section – Video Downlink
		5.8	new section – Communication and Tracking
		5.9.1	update section – High Rate Data Downlink
		5.9.2	update section – Medium Rate Data Downlink
		5.9.3	update section – Low Rate Data Downlink
		5.9.4	new section – Commanding
		5.9.5	new section – File Upload
		5.9.6	new section – File/ Data Dump
		5.9.10	new section – Up/ Downlink System Functions Overview
		5.10.1	update EWACS description
		5.10.2	update EWACS description
		5.11.1	update EWACS description
		5.11.2	update EWACS description

DaimlerChrysler Aerospace, Bremen – All Rights Reserved – Copyright per DIN 34

DOCUMENT CHANGE RECORD (CONT'D)

Issue / Revision	Date	Affected Section	Reason for Change / Brief Description for Change
Draft E		8.2.1	update section – Turbo Molecular Pump
		8.2.2	new section – Remote Power Distribution Assembly
		8.2.3	new section – Avionics Air Assembly
		8.2.4	new section – Standard Payload Computer
		8.4.1.3	update section – Trash Management
		8.4.2	update section – Mobility Aids and Restraints
Draft F	31.08.97	3.1	editorial
		3.1.5	update JEM internal layout figure
		3.1.10.1	update section – MPLM
		3.2	update section – ISPR
		3.4	editorial
		4.1.2	editorials and figure updates
		4.1.3	figure updates
		4.2	SUP location update – PIRN 42000–ES–0220A
		4.3.1	update section – Environmental Control
		4.3.3.3	update section – Data Communication
		4.3.4.3	editorial
		4.3.4.4	new section – APM LAN
		4.3.4.5	new section – APM High Rate Multiplexer
		4.4	update section – Mission Phases
		5.1.1	editorial
		5.1.1.5	section completely rewritten
		5.2.1	update section – Moderate Temperature Section
		5.2.2	update section – Cabin Loop Heat Rejection Capability
		5.3	update section – Payload Vacuum/Venting Facility
		5.3.1	update section – Payload Venting Line
		5.3.2	update section – Payload Vacuum Line
		5.4	update section – Nitrogen Distribution Network
		5.5.4	update section – Load Shedding Concept
		5.6.2	new section – Payload Categories
		5.6.3.1	update section – Data Acquisition
		5.6.3.2.2	update secton – CCSDS Packet Generation
		5.6.3.2.3	update section – Telemetry Processing DMS.MMT.RFW.5014
		5.6.3.2.5	update section – Ancillary Data
		5.6.3.8	update section – File Transfer
		5.6.3.10	update section – APT Protocol Support
		5.6.3.12	new section – Reconfigurations
		5.6.4.2	new section – Payload Bus Protocols
		5.6.4.2.2	new section – RT Protocol
		5.6.4.2.3	update section – Asynchronous Packet Transfer
		5.6.4.2.4	new section – RT and APT Protocol Usage on Payload Bus
		5.6.4.2.5	new section – Payload Bus Performance
		5.6.4.2.6	new section – Payload Bus Profiling
		5.6.5	update section – LAN Interface
		5.6.6	update section – MMU Storage and Retrieval
		5.6.7.3	update section – Crew Procedure Language
		5.7.1	VCA to SUP allocation changed, editorials
		5.7.2	update secton – VDPU
		5.7.5	VCA to SUP allocation changed
		5.8.1	update section – Communication Infrastructure
		5.8.2	update section – S–Band
		5.9.1.2	editorial
		5.9.3	update section – low rate data downlink
		5.9.4	update section – Commands
		5.9.5	update section – File Upload
		5.9.6	update section – File/Data Dump
		5.9.7	update section – Telemetry/Telecommand System Functions
		5.11.3	update section – Manual Fire Suppression
		6	update of complete section – Payload Operations and Integration
		7.2	update section – EGSE
		7.3	update section – Software Design & Development Equipment
		7.4	new section – Software Integration and Test Environment
		8.1	editorial
		8.2	update section – SPOE

DaimlerChrysler Aerospace, Bremen – All Rights Reserved – Copyright per DIN 34

DOCUMENT CHANGE RECORD (CONT'D)

Issue / Revision	Date	Affected Section	Reason for Change / Brief Description for Change
Draft G	27.02.98	1.	editorial
		1.2	substitute US–Lab PAH by new baselined IRD
		2	add Internet address of PALS – (PDR RID 61000–SY–0238)
		2.2.2	Rev. Change
		2.2.3	Rev. Change
		2.2.4	update reference documents,US–Lab PAH by new baselined IRD
		2.2.5	Rev. Change
		2.2.11	new, reference to APM EGSE ICD
		3.1.10.1	Figure 3.1.10.1–1 editorial clarification
		3.2	delete reference doc. 2.2.4, reference to ARIS added
		3.2.1	Figure 3.2.1–1 CVPS interface added
		4.1.2	Editorial clarifications
		4.2	update SUP connector allocation, editorial corrections
		4.3.3.3	update section – Data Communication (PDR RID 6100–AS–0006)
		4.3.3.4	new, ISS LOS Recorder (PDR RID 6100–SY–0123)
		4.3.4.6	update section – Human Computer Interface
		4.4	Mission Phase Resource Clarification
		5.1.1	Editorial clarification
		5.1.1.1	Editorial clarification
		5.1.1.3.2	Configuration description corrected
		5.1.1.4	update section – Front Panel Provisions (PDR RID 6100–SY–0048)
		5.1.1.5	Partition description corrected
		5.1.2.1	Figure 5.1.2.1–1 corrected
		5.2	update section – Thermal Control and Heat Removal
		5.2.1	Editorial correction
		5.2.1.1	Editorial correction
		5.2.1.2	Editorial correction
		5.3.1.1	Correction of configuration description
		5.4	Editorial correction
		5.5	update section – Power for Payloads (PDR RID 6100–SY–0235)
		5.5.2	update section – Payload power (PDR RID 6100–SY–0122)
		5.6.	change of ref. doc. 2.2.4
		5.6.4.2	update section – Payload Bus Protocols
		5.6.4.2.4	update section – RT and APT protocol usage
		5.6.4.2.5	update section – Payload Bus Performance
		5.6.4.2.6	update section – Payload Bus Profiling
		5.6.5.1	update section – APM LAN Concept (PDR RID 4440–AS–0006, 6100–SY–0118)
		5.7.1	update section – General Video Description (RID 6100–AS–0009)
		5.7.4	Removal TBC
		5.8	Introduction JEM–terminal/ ARTEMIS link
		5.8.1	update figure (PDR RID 6100–AS–0005)
		5.9	update figures
		5.9.1.1	update section – High Rate Data Interface (PDR RID 6100–AS–0007)
		5.9.1.2	update section – HRM Channel Configuration (PDR RID 6100–AS–0003)
		5.9.3.2	update section – PL Housekeeping data (PDR RID 4710–AS–0001)
		5.11.1	update section – FDS (PDR RID 6100–SY–0122, 7300–PA–0007)
		6.2	update section – Payload Integration (PDR RID 4210–AS–0001)
		6.2.1,6.2.2	update section – Payload Integration (PDR RID 6100–SY–0235, 6100–SY–0236, 6100–SY–0239)
		6.2.4.1	introduction of integrated test configuration incl. P/L EGSE
		8.1	deletion of ref. doc. 2.2.4
		8.2	deletion of ref. doc. 2.2.4
		8.3	Editorial correction
		8.4.2.2	Correction of personal restraints configuration

DaimlerChrysler Aerospace, Bremen – All Rights Reserved – Copyright per DIN 34

DOCUMENT CHANGE RECORD (CONT'D)

Draft H	30.08.98	2	update document list
		2.2.8	NASDA rack reference changed
		3.1	update ISS Configuration figure 3–1
		3.1.7	order of drawings changed
		3.1.8	new chapter – Columbus External Payload Facility
		3.2	editorial, US LAN added to table 3.2–1
		3.2.2	new, external platform introduced
		3.3	new, external platform added
		4.1.2	editorial
		4.3	implement figure 4.3–1 APM functional architecture
		4.3.3.1	editorial
		4.3.4.1	update chapter – APM DMS configuration
		4.3.4.3	editorial
		4.3.4.6	editorial, ESA fax from 14.4.98
		4.5	table 4.5–1 changed
		5.1	editorial
		5.1.1	update chapter – ISPR (ESA fax from 14.4.98)
		5.1.1.3.1	knee–brace responsiblity added (incoorporation of PDR RID 3200–SY–0043)
		5.1.3	new, external platform introduced
		5.2	order of paragraph changed
		5.2.1	editorial
		5.2.2	new, external platform introduced
		5.3.1.4	editorial
		5.3.2.3	editorial
		5.5	update Power Architecture figure
		5.5.2	update chapter – Auxiliary Power Distribution
		5.6.3.2.5	update chapter – Ancillary Data
		5.6.3.7	editorial
		5.6.3.8	update chapter – Operational File Transfer
		5.6.4.2.5	update chapter – Payload Bus Performance
		5.6.5.1	editorial
		5.7.1	figure 5.7.1–1 changed
		5.7.8	editorial change
		5.7.9	new chapter
		5.8.1	update chapter – Communication Infrastructure
		5.8.2	editorial
		5.8.4	new chapter – Ka Band
		5.9.1.2	update chapter – HRM Channel Configuration
		5.9.3.2	update chapter – Payload Housekeeping Data
		5.9.5	update chapter – File Upload
		5.9.7	editorial
		5.10.2	payload EWACS functionality corrected
		5.12	new, fire prevention monitoring added (COL–RIBRE–MIN–0248–98)
		6.2	editorial, ESA fax from 14.4.98
		6.2.2.2	editorial
		6.2.4.1	editorial
		6.3	editorial
		7	update chapter – GSE
		7.2.1	new para number
		7.2.2	new para number; payload EGSE interface description added
		7.5	update chapter – RLTF
		8.4.1.3	editorial
		9	editorial
		11	editorial
		12	new section

DaimlerChrysler Aerospace, Bremen – All Rights Reserved – Copyright per DIN 34

Draft I	26.02.99	2.2.14	SSP 50313 introduced
		2.2.15	SSP 50253 introduced
		2.2.16	SSP 50254 introduced
		3.1	Text changed acc. ESA e–mail McGrath from 21.12.98
		3.1.11.1	Figures 3.1.11.1–2 to –4 deleted
		3.2.1	Figure 3.2.1–1 modified
		4.1.2	Figures 4.1.2–3 and 4.1.2–5 modified
		4.1.3	Figure 4.1.3–1 modified
		4.3	Figure 4.3–1 modified
		4.3.3.3	update section –Data Communication
		4.3.4.1	update section – APM DMS Configuration
		4.3.4.3	update section – APM payload bus
		4.3.4.4	update section – APM LAN
		4.3.4.5	update section – APM High Rate Multiplexer
		4.3.5	update section – Payload Operation Execution support
		5.5	update section – Electrical Power Distribution to Payloads
		5.5.4	Power load shedding more detailed
		5.6	update section – DMS
		5.6.3.1	update section – Data Acquisition
		5.6.3.2	update section – Telemetry and telecommand services
		5.6.3.4	update section – Data Exception Monitoring
		5.6.3.8	update section – OFT
		5.6.5	update section Payload interace to LAN
		5.6.5.1	update section – LAN concept
		5.6.7.2	Reference to SSP 50253 and SSP 50254 added (A.I. ESA PCB #3)
		5.6.7.4.2	update section – Payload Display requirements
		5.6.8	Reference to SSP 50313 added (A.I. ESA PCB #3
		5.8.1	Figure 5.8.1–2 modified
		5.9.1.1	update section HRDL interface and protocol
		5.9.1.2	update section – HRM channel configuration
		5.9.1.3	update section – HRM involved services
		5.9.2	update section – Medium Rate Data Downlink
		5.9.3.2	Figure 5.9.3.2–1 deleted
		5.9.3.3	Figures modified
		5.9.4	udpate section – Commanding
		5.9.6	update section – File/Data Dump
		5.9.7	update section – TM/TC System Function Overview
		5.10	headline changed
		5.10.1	Figure 5.10.1–1 modified, headline changed
		5.10.2	new
		5.10.3	new
		5.11.4	old 5.12 modified
		5.12	changed into 5.11.4

DaimlerChrysler Aerospace, Bremen – All Rights Reserved – Copyright per DIN 34

Draft J	29.02.2000	1	Editorial due to new user documetation structure
		1.1	Editorial due to new user documetation structure
			Editorial due to new user documetation structure
		2.	Removal of note and update of document list
		3.1.7	update APM figure by adding EPF
		3.1.11.2	new section for external payload operation
		3.2.1	editorial
		3.3	update section Express Pallet Adapter
		3.4	update section Center Aisle Payloads
		3.6	minor update of payload ground and space operations sections
		4.	update table 4–2 and 4–3 due to LAN function extension
		4.2	update of SUP connector description
		4.3.1	update environmental conditions by old appendix C
		4.3.3.2	update video communication
		4.3.3.3	update data communication due to LAN function extension
		4.3.4.1	update DMS configuration due to LAN function extension
		4.3.4.2	update PLCU function desciption
		4.3.4.3	removal of APT function from MIL Bus
		4.3.4.4	update of LAN interface description
		4.3.4.6	clarification of system laptop usage
		4.3.5	update operation execution description due to LAN fucntion extension
		4.5.1	RLTF purpose added
		5.2.1.1.3	update section mass flow rate
		5.2.1.1.4	new section coolant flow rate from old appendix C
		5.2.1.1.5	new section local disconnection from old appendix C
		5.2.1.2	update section heat rejection capability by input from old app. C
		5.2.1.2.5.1	new section thermal analysis
		5.2.1.4	new section centre aisle payloads
		5.3	update section vacuum/venting by input from old appendix C
		5.4	update section nitrogen by input from old appendix C
		5.5.2	Editorial due to new user documetation structure
		5.5.3	Editorial due to new user documetation structure
		5.5.5	Editorial due to new user documetation structure
		5.6.3	update section services definition
		5.6.3.2	update TM / TC service description ; old section ancillary data moved to LAN description
		5.6.3.3	update ancillary data support definition
		5.6.3.4	update PLCU data processing service description
		5.6.3.5	update monitoring frequency
		5.6.3.7	update failure management services
		5.6.3.8	update logging description by configurable log file length
		5.6.3.9	old section OFT deleted (exchanged by NFS; LAN section)
		5.6.3.10	new section CCSDS protocol support
		5.6.3.11	old section APT deleted due to replacement by LAN function
		5.6.3.12	update reconfiguration description
		5.6.4.1	old section 5.6.4.1 deleted
		5.6.4.3	update RT protocol usage due to APT replacement
		5.6.4.4	update payload bus performance and integrate old section profiling
		5.6.5.1	update general description by new LAN functions
		5.6.5.2	update LAN data rate
		5.6.5.2	delete old section 5.6.5.2
		5.6.6	update payloaf file transfer due to LAN function extension
		5.6.8	update laptop provided services
		5.7.2	update video data processing unit video compression
		5.7.3	VCR capabilities clarification
		5.7.4	update VMN display diogonal
		5.7.5	update VCS CCD resolution
		5.7.8	update video downlink description
		5.8.2	update S–Band capabilities due to LAN function extension
		5.9.1	update high rate data link description
		5.9.2	update LAN TM data rate
		5.9.3	update of low rate TM description due to LAN function extension
		5.9.4	update of commanding description due to LAN function extension
		5.9.5	update file upload due to change from OFT to NFS
		5.9.6	update file dump due to change from OFT to NFS
		5.9.7	update description TM/TC services due to LAN function extension
		5.11.3	update payload provisions with PFEX interface
		5.12	new section contamination control
		6.	major update of complete section payload operation
		7.2.2	futher description of EGSE interface provisions for payloads
		12	deletion of old section due to doc restructuring

DaimlerChrysler Aerospace, Bremen – All Rights Reserved – Copyright per DIN 34

TABLE OF CONTENTS

PARAGRAPH PAGE

1 INTRODUCTION 1–1

1.1 PURPOSE OF THE HANDBOOK 1–2

1.2 SCOPE 1–2

2 RELATED DOCUMENTS 2–1

2.1 APPLICABLE DOCUMENTS 2–1

2.2 REFERENCE DOCUMENTS 2–2

3 GENERAL DESCRIPTION OF THE INTERNATIONAL SPACE STATION 3–1

3.1 INTERNATIONAL SPACE STATION ELEMENTS 3–1
3.1.1 INTEGRATED TRUSS ASSEMBLY 3–1
3.1.2 NODE ELEMENTS 3–3
3.1.3 SERVICE MODULE AND FGB 3–3
3.1.4 UNITED STATES LABORATORY 3–3
3.1.5 JAPANESE EXPERIMENT MODULE PRESSURIZED MODULE 3–4
3.1.6 JAPANESE EXPERIMENT MODULE EXPOSED FACILITY 3–6
3.1.7 COLUMBUS ATTACHED PRESSURIZED MODULE 3–8
3.1.8 COLUMBUS EXTERNAL PAYLOAD FACILITY 3–10
3.1.9 RUSSIAN RESEARCH MODULES 3–10
3.1.10 HABITATION MODULE 3–10
3.1.11 LOGISTICS ELEMENTS 3–11
3.1.11.1 MULTI–PURPOSE LOGISTICS MODULE 3–11
3.1.11.2 ON–ORBIT EXTERNAL PAYLOAD CONFIGURATION AND SERVICING BY THE SPDM 3–12

3.2 INTERNATIONAL STANDARD PAYLOAD RACK 3–16
3.2.1 INTERNATIONAL STANDARD PAYLOAD RACK SYSTEM INTERFACE 3–18

3.3 EXPRESS PALLET ADAPTER 3–20

3.4 CENTRE AISLE PAYLOADS 3–23

3.5 INTERNATIONAL SPACE STATION ENVIRONMENT 3–24
3.5.1 NATURAL ENVIRONMENT 3–24
3.5.2 INDUCED ENVIRONMENT 3–25

3.6 PAYLOAD GROUND AND SPACE OPERATIONS 3–26
3.6.1 GROUND OPERATIONS 3–27
3.6.2 FLIGHT OPERATIONS 3–28
3.6.3 DATA DISSEMINATION 3–28
3.6.4 SAFETY 3–28

DaimlerChrysler Aerospace, Bremen – All Rights Reserved – Copyright per DIN 34

TABLE OF CONTENTS (CONTINUED)

PARAGRAPH PAGE

4 APM FLIGHT CONFIGURATION 4–1

4.1 APM LAYOUT DESCRIPTION AND AREA IDENTIFICATION 4–5
4.1.1 APM COORDINATE SYSTEM 4–5
4.1.2 INTERNAL LAYOUT AND PAYLOAD ACCOMMODATION 4–7
4.1.3 APM EXTERNAL LAYOUT 4–16
4.1.3.1 EXTERNAL PAYLOAD ACCOMMODATION AND INTERFACES 4–20

4.2 PAYLOAD ACCOMMODATION PROVISIONS 4–22
4.2.1 PAYLOAD RACK 4–22
4.2.1.1 UTILITY ZONES 4–24
4.2.1.2 PAYLOAD RACK TILTING 4–24
4.2.2 CENTRE AISLE PAYLOADS 4–27
4.2.3 EXTERNAL PAYLOADS 4–30

4.3 APM FUNCTIONS 4–32
4.3.1 ENVIRONMENTAL CONTROL 4–33
4.3.2 ELECTRICAL POWER 4–40
4.3.3 COMMUNICATIONS 4–41
4.3.3.1 AUDIO COMMUNICATIONS 4–41
4.3.3.2 VIDEO COMMUNICATIONS 4–41
4.3.3.3 DATA COMMUNICATIONS 4–43
4.3.3.4 ISS LOSS–OF–SIGNAL RECORDER 4–43
4.3.4 ONBOARD DATA PROCESSING 4–44
4.3.4.1 APM DMS CONFIGURATION 4–44
4.3.4.2 PAYLOAD CONTROL UNIT (PLCU) 4–48
4.3.4.3 APM PAYLOAD BUS 4–48
4.3.4.4 APM LAN 4–49
4.3.4.5 APM HIGH RATE MULTIPLEXER 4–49
4.3.4.6 HUMAN COMPUTER INTERFACE AND CREW SERVICES 4–49
4.3.5 PAYLOAD OPERATION EXECUTION SUPPORT 4–52

4.4 APM MISSION PHASES AND PAYLOAD RESOURCES AVAILABILITY 4–53
4.4.1 APM INITIAL PAYLOAD LAUNCH CONFIGURATION 4–56

4.5 APM SYSTEM GROUND SUPPORT EQUIPMENT FOR PAYLOAD OPERATIONS 4–56

5 SYSTEM FUNCTIONS SUPPORTING PAYLOAD ACCOMMODATION 5–1

5.1 STRUCTURES AND MECHANISMS 5–1
5.1.1 INTERNATIONAL STANDARD PAYLOAD RACK (ISPR) 5–1
5.1.1.1 ISPR MASS CARRYING CAPABILITY FOR INITIAL APM PAYLOAD 5–12
5.1.1.2 ATTACHMENT POINTS 5–12
5.1.1.2.1 Launch/ Landing Attachment Mechanism 5–14
5.1.1.2.2 On–Orbit Attachment 5–14
5.1.1.2.3 GSE Attachment Points 5–14
5.1.1.3 FRONT PANEL PROVISIONS 5–16
5.1.1.4 PARTITIONS 5–16

DaimlerChrysler Aerospace, Bremen – All Rights Reserved – Copyright per DIN 34

TABLE OF CONTENTS (CONTINUED)

PARAGRAPH PAGE

5.1.2 ATTACHMENT PROVISIONS FOR CENTRE AISLE EQUIPMENT 5–16
5.1.2.1 SEAT TRACK MOUNTING PROVISIONS ON DECK RACK POST 5–16
5.1.3 EXTERNAL PAYLOAD ADAPTERS 5–18

5.2 PAYLOAD THERMAL CONTROL AND HEAT REMOVAL 5–19
5.2.1 APM INTERNAL THERMAL CONTROL AND HEAT REMOVAL 5–19
5.2.1.1 MODERATE TEMPERATURE SECTION 5–20
5.2.1.1.1 Moderate Temperature Section Heat Rejection Capability 5–21
5.2.1.1.2 Moderate Temperature Section Inlet/ outlet Temperatures at the ISPR Interface 5–21
5.2.1.1.3 Moderate Temperature Section Mass Flow Rate 5–21
5.2.1.1.4 Coolant Flow Rate 5–21
5.2.1.1.5 Local Disconnection 5–22
5.2.1.2 CABIN LOOP PAYLOAD HEAT REJECTION CAPABILITY 5–23
5.2.1.2.1 Integrated Racks Thermal Analysis 5–23
5.2.1.3 AIR COOLING 5–24
5.2.1.4 CENTRE AISLE PAYLOADS 5–24
5.2.2 APM EXTERNAL PAYLOAD FACILITY 5–24

5.3 PAYLOAD VACUUM/ VENTING FACILITY 5–25
5.3.1 PAYLOAD VENTING LINE 5–30
5.3.1.1 INTERFACE PRESSURE 5–30
5.3.1.2 VENT GAS COMPATIBILITY 5–32
5.3.2 PAYLOAD VACUUM LINE 5–32
5.3.2.1 INTERFACE PRESSURE 5–32
5.3.2.2 PROCESS GAS COMPATIBILITY 5–35

5.4 NITROGEN DISTRIBUTION NETWORK 5–36

5.5 ELECTRICAL POWER TO PAYLOAD 5–38
5.5.1 POWER DISTRIBUTION TO PAYLOADS 5–42
5.5.2 VOLTAGE QUALITY/ INRUSH CURRENT 5–43
5.5.3 ELECTRICAL POWER LOAD SHEDDING 5–43
5.5.4 POWER CONNECTOR INTERFACE 5–43

5.6 DATA MANAGEMENT SYSTEM 5–44
5.6.1 GENERAL DESCRIPTION 5–44
5.6.2 PAYLOAD CATEGORIES 5–45
5.6.3 PAYLOAD CONTROL UNIT PROVIDED SERVICES FOR PAYLOADS 5–47
5.6.3.1 DATA ACQUISITION AND DISTRIBUTION 5–49
5.6.3.2 TELEMETRY AND TELECOMMAND SERVICES 5–50
5.6.3.2.1 CCSDS Routing Service 5–50
5.6.3.2.2 CCSDS Packet Generation 5–51
5.6.3.2.3 Telemetry Processing 5–51
5.6.3.2.4 Telecommand processing 5–52
5.6.3.3 ANCILLARY DATA 5–53
5.6.3.4 PLCU DATA PROCESSING SUPPORT 5–53
5.6.3.4.1 Trend Analysis 5–53
5.6.3.4.2 Means Analysis 5–53
5.6.3.5 DATA EXCEPTION MONITORING 5–54

DaimlerChrysler Aerospace, Bremen – All Rights Reserved – Copyright per DIN 34

TABLE OF CONTENTS (CONTINUED)

PARAGRAPH PAGE

5.6.3.6 USER APPLICATION PROGRAMMING INTERFACE 5–55
5.6.3.6.1 ADA Language Support 5–55
5.6.3.6.2 User Control Language Support 5–55
5.6.3.7 FAILURE MANAGEMENT SERVICES 5–56
5.6.3.8 LOGGING 5–57
5.6.3.9 RT PROTOCOL SUPPORT 5–57
5.6.3.10 CCSDS PROTOCOL SUPPORT 5–57
5.6.3.11 TIME DISTRIBUTION 5–57
5.6.3.12 RECONFIGURATIONS 5–57
5.6.4 PAYLOAD MIL– STD 1553B BUS 5–58
5.6.4.1 GENERAL 5–58
5.6.4.2 PAYLOAD BUS PROTOCOL 5–59
5.6.4.3 RT PROTOCOL USAGE ON PAYLOAD BUS 5–60
5.6.4.4 PAYLOAD BUS PERFORMANCE AND PROFILING 5–61
5.6.5 PAYLOAD INTERFACE TO APM LAN 5–62
5.6.5.1 GENERAL 5–62
5.6.5.2 APM LAN CONCEPT 5–62
5.6.6 MMU DATA STORAGE AND RETRIEVAL 5–63
5.6.7 APM MASTER TIMELINE (MTL) 5–64
5.6.8 LAPTOP PROVIDED SERVICES FOR PAYLOADS 5–65
5.6.8.1 MTL VIEWER 5–65
5.6.8.2 MONITOR CONTROL DISPLAY EXECUTOR 5–67
5.6.8.3 CREW SUPPORT DOCUMENTATION TOOL 5–68
5.6.8.4 AUTOMATED CREW PROCEDURES 5–69
5.6.8.4.1 Crew Procedure Language 5–71
5.6.8.4.2 Automatic Crew Procedure Executor 5–72
5.6.8.5 PAYLOAD APPLICATION INITIATION 5–73
5.6.8.6 FLAP LAUNCHER 5–73
5.6.8.7 NOTIFICATION MANAGEMENT 5–74
5.6.8.8 ANNOTATION SERVICE 5–74
5.6.8.9 MONITORING LIMITS DISPLAY 5–74
5.6.8.10 ON-LINE HELP 5–74
5.6.8.11 HUMAN COMPUTER INTERFACE (HCI) 5–74
5.6.8.11.1 Synoptic Displays 5–76
5.6.8.11.2 Payload Display Requirements 5–76
5.6.9 REQUIREMENTS FOR PAYLOAD PROVIDED PRIVATE LAPTOPS DIRECTLY INTERFACING PAYLOAD PROCESSORS 5–78

5.7 VIDEO PROVISIONS FOR PAYLOADS 5–79
5.7.1 GENERAL 5–79
5.7.2 VIDEO / DATA PROCESSING UNIT 5–81
5.7.3 VIDEO RECORDER 5–82
5.7.4 VIDEO MONITOR 5–82
5.7.5 VIDEO CAMERA ASSEMBLY 5–83
5.7.6 PAYLOAD PHYSICAL USER INTERFACE 5–83
5.7.7 SPECIFIC VIDEO INTERFACE AT ISPR LOCATION A4 5–83
5.7.8 VIDEO DOWNLINK 5–83
5.7.9 PAYLOAD CAMERA COMMANDING 5–84

DaimlerChrysler Aerospace, Bremen – All Rights Reserved – Copyright per DIN 34

TABLE OF CONTENTS (CONTINUED)

PARAGRAPH PAGE

5.8 COMMUNICATION AND TRACKING 5–85
5.8.1 COMMUNICATION INFRASTRUCTURE 5–85
5.8.2 S–BAND 5–88
5.8.3 KU–BAND 5–88
5.8.4 KA–BAND (TBC) 5–89

5.9 UP/ DOWNLINK OF PAYLOAD DATA 5–90
5.9.1 HIGH RATE DATA DOWNLINK 5–90
5.9.1.1 HIGH RATE DATA LINK INTERFACE AND PROTOCOL 5–90
5.9.1.2 HRM FUNCTION 5–90
5.9.1.3 INVOLVED SERVICES 5–92
5.9.2 MEDIUM RATE DATA LINK 5–94
5.9.2.1 INVOLVED SERVICES 5–94
5.9.3 LOW RATE DATA DOWNLINK 5–97
5.9.3.1 PAYLOAD SCIENCE AND HOUSEKEEPING DATA 5–97
5.9.3.2 PAYLOAD HEALTH & STATUS DATA 5–97
5.9.4 COMMANDING 5–100
5.9.4.1 GROUND COMMANDS 5–100
5.9.4.1.1 Involved Services 5–102
5.9.4.2 ONBOARD COMMANDS 5–104
5.9.4.2.1 Involved Services 5–105
5.9.4.2.1.1 Commands from Crew Procedures 5–105
5.9.4.2.1.2 Commands from Payload ADA Application 5–106
5.9.4.2.1.3 Commands from Payload Automated Procedure 5–107
5.9.4.2.1.4 Commands from Master Timeline 5–108
5.9.4.2.1.5 Commands from Payload 5–109
5.9.5 FILE UPLOAD 5–110
5.9.6 FILE/ DATA DUMP 5–110
5.9.7 TELEMETRY/ TELECOMMAND SYSTEM FUNCTIONS OVERVIEW 5–111

5.10 EMERGENCY, WARNING, CAUTION AND SAFING SYSTEM (EWACS) 5–115
5.10.1 APM VITAL DMS EWACS DESCRIPTION 5–115
5.10.2 APM VITAL DMS EWACS IMPLEMENTATION FOR PAYLOADS 5–117
5.10.3 PAYLOAD CAUTION AND WARNING DATA (C&W DATA) 5–117

5.11 PAYLOAD FIRE DETECTION AND SUPPRESSION (FDS) 5–118
5.11.1 IMPLEMENTATION 5–118
5.11.2 PAYLOAD PROVISIONS AND INTERFACES 5–120
5.11.3 MANUAL FIRE SUPPRESSION 5–120
5.11.4 PAYLOAD PARAMETER MONITORING FOR FIRE PREVENTION 5–121

5.12 CONTAMINATION CONTROL 5–122
5.12.1 INTERNAL CONTAMINATION CONTROL 5–122
5.12.1.1 TRACE GAS CONTAMINATION 5–123
5.12.1.2 PARTICULATES CONTAMINATION 5–124
5.12.1.3 MICROBIAL CONTAMINATION 5–125
5.12.2 EXTERNAL CONTAMINATION CONTROL 5–126

DaimlerChrysler Aerospace, Bremen – All Rights Reserved – Copyright per DIN 34

TABLE OF CONTENTS (CONTINUED)

PARAGRAPH PAGE

6 PAYLOAD OPERATIONS AND INTEGRATION 6–1

6.1 GENERAL DESCRIPTION 6–1
6.1.1 THE APM PAYLOAD END–TO–END PROCESS 6–1
6.1.2 MANAGEMENT OF THE PAYLOAD END–TO–END PROCESS 6–8
6.1.3 SPACE STATION GROUND SEGMENT 6–8

6.2 PAYLOAD INTEGRATION 6–13
6.2.1 PAYLOAD INTEGRATION SUPPORT 6–14
6.2.1.1 USER INTERFACING 6–16
6.2.1.2 PAYLOAD DATA COLLECTION 6–16
6.2.1.3 PAYLOAD SAFETY 6–20
6.2.1.4 PAYLOAD CERTIFICATION OF FLIGHT READINESS 6–21
6.2.2 PAYLOAD ANALYTICAL INTEGRATION (ELEMENT LEVEL) 6–23
6.2.2.1 APM PAYLOAD INCREMENT DESIGN & ANALYSIS 6–23
6.2.2.2 PAYLOAD SOFTWARE INTEGRATION AND VERIFICATION 6–24
6.2.2.3 APM PAYLOAD COMPLEMENT VERIFICATION 6–25
6.2.3 PAYLOAD PHYSICAL INTEGRATION 6–27
6.2.3.1 PHYSICAL INTEGRATION OF THE APM LAUNCH PAYLOAD COMPLEMENT 6–27
6.2.3.2 PHYSICAL INTEGRATION OF APM FOLLOW–ON PAYLOADS 6–30
6.2.4 PAYLOAD LOGISTICS 6–31
6.2.4.1 PAYLOAD LOGISTICS OVERVIEW 6–31
6.2.4.2 PAYLOAD LOGISTICS SUPPORTING ACTIVITIES 6–32

6.3 PAYLOAD OPERATIONS 6–32
6.3.1 PAYLOAD OPERATIONS INTEGRATION 6–33
6.3.1.1 PAYLOAD OPERATIONS INTEGRATION MANAGEMENT 6–33
6.3.1.2 PAYLOAD OPERATIONS PREPARATION 6–33
6.3.1.2.1 Payload Operations Documents and Databases 6–34
6.3.1.2.2 Operational Rules and Constraints 6–35
6.3.1.2.3 Payload Operations Products 6–36
6.3.1.3 PAYLOAD REVIEWS 6–39
6.3.1.4 PAYLOAD TRAINING 6–41
6.3.1.5 FRC/USOC/UHB VALIDATION AND END–TO–END TROUBLE SHOOTING 6–43
6.3.2 PAYLOAD OPERATIONS EXECUTION 6–44
6.3.2.1 PAYLOAD OPERATIONS MANAGEMENT 6–44
6.3.2.2 PAYLOAD ON–ORBIT OPERATIONS 6–45
6.3.2.2.1 Payload Routine On–Board Operations 6–45
6.3.2.2.2 payload operations support 6–47
6.3.2.2.3 On–Orbit External Payload Configuration and Servicing by the SPDM 6–48
6.3.2.2.4 payload operations control 6–48
6.3.2.2.4.1 Payload operations & status monitoring 6–48
6.3.2.2.4.2 payload commanding & file generation 6–50
6.3.2.3 PAYLOAD OPERATIONS EXECUTION PLANNING 6–50
6.3.2.3.1 APM Short Term Plan Development 6–51
6.3.2.4 PAYLOAD OPERATIONS EXECUTION EVALUATION 6–53

DaimlerChrysler Aerospace, Bremen – All Rights Reserved – Copyright per DIN 34

TABLE OF CONTENTS (CONTINUED)

PARAGRAPH PAGE

7 GROUND SUPPORT EQUIPMENT 7–1

7.1 MECHANICAL GROUND SUPPORT EQUIPMENT 7–1
7.1.1 RACK HANDLING CAGE 7–1
7.1.2 RACK HANDLING FRAME 7–2
7.1.3 MGSE TO SUPPORT EXTERNAL PAYLOADS 7–3

7.2 ELECTRICAL GROUND SUPPORT EQUIPMENT 7–3
7.2.1 APM EGSE 7–3
7.2.2 INTERFACE PROVISIONS/ REQUIREMENTS FOR P/L EGSE 7–6
7.2.2.1 APM C/D BASELINE CONFIGURATION 7–6
7.2.2.2 EGSE CONFIGURATION WITH PROTOCOL CONVERTER BOX 7–8

7.3 SOFTWARE DESIGN AND DEVELOPMENT FACILITY 7–10

7.4 SOFTWARE INTEGRATION AND TEST ENVIRONMENT 7–11

7.5 RACK LEVEL TEST FACILITY 7–14

7.6 COMMON EQUIPMENT FOR USE IN GROUND OPERATIONS 7–18

8 PAYLOAD & LABORATORY SUPPORT EQUIPMENT, STANDARD PAYLOAD OUTFITTING EQUIPMENT AND TOOLS 8–1

8.1 LABORATORY SUPPORT EQUIPMENT 8–1

8.2 STANDARD PAYLOAD OUTFITTING EQUIPMENT (SPOE) 8–1
8.2.1 TURBO MOLECULAR PUMP 8–2
8.2.1.1 PUMP DESCRIPTION 8–2
8.2.1.2 PUMP CHARACTERISTICS 8–2
8.2.2 REMOTE POWER DISTRIBUTION ASSEMBLY 8–2
8.2.3 AVIONICS AIR ASSEMBLY 8–5
8.2.4 STANDARD PAYLOAD COMPUTER 8–6

8.3 TOOL KIT 8–6

8.4 CREW SUPPORT EQUIPMENT 8–8
8.4.1 HOUSEKEEPING/TRASH MANAGEMENT PROVISIONS 8–8
8.4.1.1 ROUTINE CLEANING/DISINFECTION 8–8
8.4.1.2 TRASH COLLECTION AND TRASH COMPACTION 8–9
8.4.1.3 PAYLOAD–UNIQUE HOUSEKEEPING AND TRASH MANAGEMENT 8–9
8.4.1.4 VACUUM CLEANER 8–9
8.4.2 MOBILITY AIDS AND RESTRAINTS 8–9
8.4.2.1 EQUIPMENT RESTRAINTS 8–10
8.4.2.2 PERSONAL RESTRAINTS 8–10

DaimlerChrysler Aerospace, Bremen – All Rights Reserved – Copyright per DIN 34

TABLE OF CONTENTS (CONTINUED)

PARAGRAPH PAGE

9 SAFETY AND PRODUCT ASSURANCE REQUIREMENTS 9–1

10 GLOSSARY OF TERMS AND DEFINITIONS 10–1

11 ACRONYMS 11–1

DaimlerChrysler Aerospace, Bremen – All Rights Reserved – Copyright per DIN 34

LIST OF FIGURES

FIGURE PAGE

FIGURE 3–1 INTERNATIONAL SPACE STATION CONFIGURATION 3–2
FIGURE 3.1.4–1 US LABORATORY INTERNAL LAYOUT 3–4
FIGURE 3.1.5–1 JAPANESE EXPERIMENT MODULE (JEM) PM INTERNAL LAYOUT 3–5
FIGURE 3.1.6–1 JEM PRESSURIZED MODULE AND EXPOSED FACILITY 3–7
FIGURE 3.1.7–1 APM OVERALL CONFIGURATION 3–8
FIGURE 3.1.7–2 COLUMBUS ATTACHED PRESSURIZED MODULE 3–9
FIGURE 3.1.8–1 COLUMBUS EXTERNAL PAYLOAD FACILITY 3–10
FIGURE 3.1.11.1–1 MULTI PURPOSE LOGISTICS MODULE RACK LAYOUT 3–12
FIGURE 3.2.1–1 ISPR UTILITY INTERFACE 3–19
FIGURE 3.3–1 EXPRESS PALLET ADAPTER 3–21
FIGURE 3.3–2 EXPA CONNECTOR INTERFACES 3–21
FIGURE 3.3–3 EXPRESS PALLET ADAPTER ON–ORBIT COORDINATE SYSTEM (TBC) 3–22
FIGURE 3.2.1–1 STANDARD UTILITY PANEL(SUP) 1 AND 4 INTERFACE 3–23
FIGURE 3.6–1 PAYLOAD OPERATIONS PROCESS 3–26
FIGURE 3.6–1 CATEGORIZATION OF PAYLOADS 3–27
FIGURE 4.1.1–1 APM REFERENCE COORDINATE SYSTEM 4–5
FIGURE 4.1.1–2 APM COORDINATE SYSTEM AND ISS COORDINATE SYSTEM RELATION . . . 4–6
FIGURE 4.1.2–1 APM INTERNAL CONFIGURATION AND CROSS–SECTION 4–8
FIGURE 4.1.2–2 APM TO ISPR UTILITY INTERFACE LAYOUT 4–9
FIGURE 4.1.2–3 CENTRE AISLE VOLUME PROVISIONS FOR PAYLOAD 4–10
FIGURE 4.1.2–4 CENTRE AISLE PAYLOAD CLEARANCE ENVELOPE 4–11
FIGURE 4.1.2–1 SEAT TRACK INTERFACE 4–12
FIGURE 4.1.2–4 PORT CONE INTERNAL LAYOUT (VIEW FROM MODULE INSIDE) 4–14
FIGURE 4.1.2–5 STARBOARD CONE INTERNAL LAYOUT 4–15
FIGURE 4.1.3–1 APM EXTERNAL LAYOUT 4–17
FIGURE 4.1.3–2 PORT CONE EXTERNAL LAYOUT 4–18
FIGURE 4.1.3–3 STARBOARD AND PORT CONE EXTERNAL LAYOUT 4–19
FIGURE 4.1.3.1–1 PAYLOAD MOUNTING PROVISIONS ON EXPA 4–20
FIGURE 4.1.3.1–2 EXPA ATTACH POINT DETAILS 4–20
FIGURE 4.1.3.1–3 EXPA ELECTRICAL CONNECTOR INTERFACE 4–21
FIGURE 4.1.3.1–4 EXPA DATA CONNECTOR INTERFACE 4–21
FIGURE 4.2–1 TYPICAL INTEGRATED ISPR 4–23
FIGURE 4.2.1.2–1 WALL INSPECTION AND RACK MANIPULATION PRINCIPLES EMPLOYING HINGEABLE RACKS 4–25
FIGURE 4.2.1.2–2 RACK FRONT ACCESS AND USE OF EQUIPMENT DRAWER (APM CONFIGURATION NOT REPRESENTATIVE) 4–26
FIGURE 4.2–2 CABIN UTILITY ACCESS PROVISIONS FOR PAYLOAD CENTRE AISLE 4–28
FIGURE 4.2–3 SUP PANEL LAYOUT 4–29
FIGURE 4.2.3–1 APM PORT CONE WITH EXTERNAL PAYLOAD MECHANISMS 4–31

DaimlerChrysler Aerospace, Bremen – All Rights Reserved – Copyright per DIN 34

LIST OF FIGURES (CONTINUED)

FIGURE PAGE

FIGURE 4.3–1 APM FUNCTIONAL ARCHITECTURE 4–32
FIGURE 4.3.1–1 ENVIRONMENTAL CONTROL SYSTEM (ECS) OVERALL SCHEMATIC 4–34
FIGURE 4.3.1–2 CABIN VENTILATION PATTERN 4–39
FIGURE 4.3.4.1–1 APM DMS CONFIGURATION 4–46
FIGURE 4.3.4.1–2 APM EXTERNAL PAYLOAD DMS CONFIGURATION 4–47
FIGURE 4.3.4.6–1 LAPTOP (PCS) I/F TO PAYLOAD AND PLCU SERVICES 4–51
FIGURE 5.1.1–1, NASDA FOUR–POST ISPR RACK ASSY I/F DIMENSIONS 5–2
FIGURE 5.1.1–2, NASDA FOUR–POST ISPR RACK ASSY I/F DIMENSIONS 5–3
FIGURE 5.1.1–3 NASDA FOUR–POST ISPR RACK ASSY I/F DIMENSIONS 5–4
FIGURE 5.1.1–4 NASDA FOUR–POST ISPR RACK ASSY I/F DIMENSIONS 5–5
FIGURE 5.1.1–5 NASDA SIX–POST ISPR RACK ASSY I/F DIMENSIONS 5–6
FIGURE 5.1.1–6 NASDA SIX–POST ISPR RACK ASSY I/F DIMENSIONS 5–7
FIGURE 5.1.1–7 NASDA SIX–POST ISPR RACK ASSY I/F DIMENSIONS 5–8
FIGURE 5.1.1–8 ISPR SEAT TRACK INTERFACE 5–9
FIGURE 5.1.1–9 UTILITY INTERFACE PANEL CONNECTOR LOCATIONS 5–11
FIGURE 5.1.1.2–1 ISPR ATTACHMENT POINTS 5–13
FIGURE 5.1.1.2.3–1 GROUND HANDLING MECHANICAL ATTACHMENT POINTS 5–15
FIGURE 5.1.2.1–1 MOUNTING PROVISIONS ON DECK RACK POST 5–17
FIGURE 5.2.1–1 FUNCTIONAL SCHEMATIC OF WATER COOLING LOOPS 5–20
FIGURE 5.3–2 VENTING LINE LAYOUT 5–27
FIGURE 5.3–3 VACUUM LINE LAYOUT 5–28
FIGURE 5.3–1 FUNCTIONAL SCHEMATIC OF APM VACUUM AND VENTING ASSEMBLY 5–29
FIGURE 5.3.1.1–1 PAYLOAD PRESSURE VERSUS TIME FOR THE WORST LOCATION FOR EACH BRANCH 5–31
FIGURE 5.3.2.1–1 VACUUM LINE BREAKDOWN WITH INDICATION OF EACH PAYLOAD LOCATION 5–33
FIGURE 5.4–1 OVERALL SCHEMATIC OF THE N2 SUPPLY SYSTEM FOR PAYLOADS 5–37
FIGURE 5.5–1 APM ELECTRICAL POWER DISTRIBUTION SYSTEM 5–39
FIGURE 5.5–2 APM ELECTRICAL POWER DISTRIBUTION SYSTEM FOR EXTERNAL PAYLOADS 5–40
FIGURE 5.5–3 PDU TO ISPR INTERFACE 5–41
FIGURE 5.6.3–1 PLCU SERVICES 5–48
FIGURE 5.6.3.1–1 COMMON DATA POOL DATA FLOW LOGIC 5–50
FIGURE 5.6.4.2–1 DATA MESSAGE FORMAT 5–60
FIGURE 5.6.5.2–1 APM LAN COMMUNICATION PROTOCOL LAYERS 5–63
FIGURE 5.6.8.1–1 MTL VIEWER 5–67
FIGURE 5.6.8.2–1 GENERAL OVERVIEW MCD EXECUTOR 5–68
FIGURE 5.6.8.4–1 EXAMPLE PRESENTATION CODE DIAGRAM 5–70
FIGURE 5.6.8.4–2 EXAMPLE LFD DIAGRAM 5–71

DaimlerChrysler Aerospace, Bremen – All Rights Reserved – Copyright per DIN 34

LIST OF FIGURES (CONTINUED)

FIGURE PAGE

FIGURE 5.6.8.4.1–1 EXAMPLE CPL SOURCE CODE 5–72
FIGURE 5.6.8.4.2–1 GENERAL OVERVIEW ACP EXECUTOR 5–73
FIGURE 5.6.8.11–1 HCI SW ARCHITECTURE 5–75
FIGURE 5.7.1–1 APM VIDEO SYSTEM DIAGRAM 5–80
FIGURE 5.8.1–1 END–TO–END COMMUNICATION INFRASTRUCTURE 5–86
FIGURE 5.8.1–2 APM DOWNLINK COMMUNICATION ARCHITECTURE 5–87
FIGURE 5.9.1.1–1 HRM DATA DOWNLINK 5–91
FIGURE 5.9.1.3–1 PAYLOAD HIGH RATE DATA TELEMETRY 5–93
FIGURE 5.9.2–1 MEDIUM RATE DATA DOWNLINK 5–95
FIGURE 5.9.2.1–1 PAYLOAD MEDIUM RATE DATA TELEMETRY 5–96
FIGURE 5.9.3.1–1 PAYLOAD LOW RATE DATA TELEMETRY AND INVOLVED SERVICES USING RT PROTOCOL 5–98
FIGURE 5.9.3.1–2 PAYLOAD LOW RATE SCIENCE AND HOUSEKEEPING DATA DOWNLINK . . 5–99
FIGURE 5.9.4–1 PAYLOAD COMMAND UPLINK 5–101
FIGURE 5.9.4.1.1–1: COMMAND PATH FROM GROUND TO PAYLOADS USING RT PROTOCOL OR IP/UDP PROTOCOL 5–103
FIGURE 5.9.4.2.1–1 COMMAND PATH FROM CREW PROCEDURE TO PAYLOADS USING RT PROTOCOL OR IP/UDP PROTOCOL 5–105
FIGURE 5.9.4.2.1.2–1 COMMAND PATH FROM PAYLOAD SWOPS TO PAYLOADS USING RT PROTOCOL OR IP/UDP/CCDSDS PROTOCOL 5–106
FIGURE 5.9.4.2.1.3–1 COMMAND PATH FROM PAYLOAD AUTOMATED PROCEDURE USING RT PROTOCOL OR IP/UDP/CCSDS PROTOCOL 5–107
FIGURE 5.9.4.2.1–1 COMMAND PATH FROM MASTER TIMELINE TO PAYLOAD LAN INTERFACE 5–108
FIGURE 5.9.4.2.1.5–1 COMMAND PATH FROM PAYLOAD TO PLCU SWOP 5–109
FIGURE 5.10.1–1 FUNCTIONAL BLOCK DIAGRAM OF APM EWACS SYSTEM 5–116
FIGURE 5.11.1–1 FUNCTIONAL BLOCK DIAGRAM OF APM ISPR FDS SYSTEM FOR AN ISPR USING MAIN & AUXILIARY POWER 5–119
FIGURE 5.11.3–1 PFEX CO2 DISCHARGED FLOW RATE VS. TIME 5–121
FIGURE 6.1.1–1 DIFFERENT CLASSES OF PAYLOADS 6–2
FIGURE 6.1.1–2 PAYLOAD DESIGN AND DEVELOPMENT PROCESS 6–3
FIGURE 6.1.1–3 PAYLOAD END–TO–END PROCESS 6–7
FIGURE 6.1.3–1 SCHEMATIC OF THE SPACE STATION GROUND–SEGMENT 6–11
FIGURE 6.2.1–1 CUSTOMER DOCUMENTATION TREE 6–15
FIGURE 6.2.2.3–1 EUROPEAN PAYLOAD INTEGRATION TEMPLATE 6–26
FIGURE 6.2.3.1–1 APM LAUNCH PAYLOAD INTEGRATION & TEST FLOW 6–29
FIGURE 6.3.2.2.1–1 DISTRIBUTED OPERATIONS CONCEPT 6–46
FIGURE 7.1.1–1 RACK ATTACHMENT POINTS 7–1
FIGURE 7.1.1–2 PAYLOAD RACK HOISTING DEVICE 7–2
FIGURE 7.1.2–1 RACK HANDLING FRAME 7–3
FIGURE 7.2.1–1 APM EGSE BLOCK DIAGRAM 7–9

DaimlerChrysler Aerospace, Bremen – All Rights Reserved – Copyright per DIN 34

LIST OF FIGURES (CONTINUED)

FIGURE PAGE

FIGURE 7.4–1 SITE BLOCK DIAGRAM 7–13
FIGURE 7.5–1 RLTF TEST CONFIGURATION 7–15
FIGURE 7.5–2 RLTF PHYSICAL CONFIGURATION 7–17
FIGURE 8.2.1.1–1 TURBO MOLECULAR PUMP TMH 180 OVERALL DIMENSIONS 8–3
FIGURE 8.2.1.1–2 TURBO MOLECULAR PUMP TPH 065 HM OVERALL DIMENSIONS 8–4
FIGURE 8.4.2–1 MOBILITY AIDS AND RESTRAINTS 8–10
FIGURE 8.4.2.2–1 FOOT RESTRAINTS 8–11

DaimlerChrysler Aerospace, Bremen – All Rights Reserved – Copyright per DIN 34

LIST OF TABLES

TABLE PAGE

TABLE 3.2–1 APM ISPR LOCATION UTILITY INTERFACES 3–17
TABLE 4–1 SUMMARY OF ORBITAL INFRASTRUCTURE AND APM MAJOR FEATURES. 4–2
TABLE 4–2 SUMMARY OF ORBITAL INFRASTRUCTURE AND APM MAJOR FEATURES (CONT.) 4–3
TABLE 4–3 SUMMARY OF OVERALL APM PAYLOAD RESOURCES 4–4
TABLE 4.2–1 SUP CONNECTOR ALLOCATION AND FUNCTION FOR APM PAYLOADS 4–29
TABLE 4.3.1–1 THERMAL/ENVIRONMENTAL FUNCTIONS VERSUS APM OPERATIONAL MODES 4–36
TABLE 4.3.1–1 THERMAL/ENVIRONMENTAL FUNCTIONS VERSUS APM OPERATIONAL MODES (CONTINUED) 4–37
TABLE 4.3.1–2 CONSTITUENTS AND NOMINAL LIMITS OF THE APM ATMOSPHERE 4–38
TABLE 4.4–1 APM MISSION PHASES DEFINITION 4–54
TABLE 4.4–2 PAYLOAD SYSTEM FUNCTIONS VS. MISSION PHASES 4–55
TABLE 4.4–3 PAYLOAD SYSTEM FUNCTIONS VS. MISSION PHASES (CONT.) 4–55
TABLE 4.5–1 APM SYSTEM GROUND SUPPORT EQUIPMENT FOR PAYLOAD OPERATION . . . 4–56
TABLE 5.3.2.1–1 MAXIMUM STEADY STATE PRESSURE IN THE VACUUM LINE 5–34
TABLE 5.5.1–1 POWER DISTRIBUTION TO PAYLOADS 5–42
TABLE 5.9.7–1 TELEMETRY/ TELECOMMAND SYSTEM FUNCTIONS OVERVIEW 5–113
TABLE 5.9.7–1 TELEMETRY/ TELECOMMAND SYSTEM FUNCTIONS OVERVIEW 5–114
TABLE 6.1.1–1 TYPICAL PAYLOAD DEVELOPMENT CYCLE 6–4
TABLE 6.1.3–1 SPACE STATION GROUND SEGMENT ENTITIES, TEAMS AND FUNCTIONS . . . 6–12
TABLE 8.2.1.1–1 MAIN CHARACTERISTICS OF THE TURBO MOLECULAR VACUUM PUMP TPH 180 HM AND TMH 065 8–5
TABLE 8.3–1 CONTENTS OF THE STANDARD IVA TOOL KIT. 8–6

DaimlerChrysler Aerospace, Bremen – All Rights Reserved – Copyright per DIN 34

This page is intentionally left blank.

DaimlerChrysler Aerospace, Bremen – All Rights Reserved – Copyright per DIN 34

1 INTRODUCTION

The Attached Pressurized Module (APM) as part of the International Space Station (ISS) will be an evolving facility in low earth orbit. Its mission is to support scientific, technological,and commercial activities in space. These activities will involve disciplines in the areas of basic and applied research, technology development and demonstration,and servicing of space systems. Those people and organizations who will conduct scientific and commercial research and development activities onboard the ISS elements are called users. Users originate from government, academic,and commercial sectors of the international participants.

The COLUMBUS Payload Accommodation Handbook (CPAH) constitutes an integral part of the overall ISS Payload Accommodation Handbook documentation, which is organized into volumes, addressing the various laboratory modules and other parts of the Space Station infrastructure.

The COLUMBUS Payload Accommodation Handbook (CPAH) is only for users of the APM. The APM is also known as the COLUMBUS laboratory. The CPAH contains all essential information on the APM and its operation and environment, and represents an introduction to the APM system for the APM user.

Thus it provides to the user a description of the ISS, of the APM system and the major APM subsystems of interest to the users. Furthermore the mission preparation process, the flight operations design process and the ground processing activities for payloads are outlined.

The CPAH does not include interface design and service requirements for users. However it gives a good background information for the understanding of the payload design requirements as they are defined in the COLUMBUS Pressurized Payload Interface Requirement Document (COL–RIBRE–SPE–0194).

DaimlerChrysler Aerospace, Bremen – All Rights Reserved – Copyright per DIN 34

The CPAH main volume is organized as follows:

- The introduction of **Section 1** defines the scope and purpose of the CPAH.
- **Section 2** lists the applicable and reference documents.
- **Section 3** provides an overview of the ISS infrastructure including an overview of accommodation features available to payloads.
- In **Section 4** , a system level description of the APM is given by introducing the main functions and capabilities available for the operation of payloads.
- **Section 5** describes the dedicated system functions of the APM and describes the physical and functional interfaces between the systems and the users, be it a particular payload developer or the overall payload integrator.
- **Section 6** explains the onboard and ground payload operations activities.
- **Section 7** describes the ground support equipment available to users.
- **Section 8** defines the payload support equipment available to users on orbit. In addition to that, the available Laboratory Support Equipment(LSE) and tools are introduced.
- **Section 9** makes reference to the payload safety requirements.
- **Section 10** is a glossary of terms and definitions
- **Section 11** contains a list of abbreviations and acronyms

1.1 PURPOSE OF THE HANDBOOK

The purpose of the CPAH is to provide information on the APM design, capabilities, performance characteristics, and constraints to provide users with a better understanding for the payload design process and the integration into an APM mission increment This handbook provides descriptions and definitions for user interfaces, support systems, operations, environments,and safety aspects of the APM, so that the user can properly design and build his payload equipment.
A payload is a discrete set of equipment mounted in the APM to accomplish an on–orbit scientific, technological, or commercial mission. This equipment includes (but is not limited by) the facility and/or support hardware and software.

1.2 SCOPE

Information contained within this document is provided for all users of the APM. It must be noted, however, that non–European users of the APM may have to consider other applicable documents, operational constraints, resources and requirements. In particular, payload ground processing operations and some on–orbit operations are described specifically for European users.

DaimlerChrysler Aerospace, Bremen – All Rights Reserved – Copyright per DIN 34

Developers of US payloads hosted in the APM module are referred to the interface design requirements in the NASA Pressurized Payload Interface Requirement Document (IRD) SSP 57000 (Reference document 2.2.4). Specifically there are physical extensions of the US Lab C&DH system into the APM module which are described with their logical and functional interfaces in that document .

DaimlerChrysler Aerospace, Bremen – All Rights Reserved – Copyright per DIN 34

2 RELATED DOCUMENTS

ESA documents are available from:

MSM–MCM Management Support Section
ESTEC
Postbus 299
2200AG Noordwijk
The Netherlands

NASA Documents are available from:

NASA, George C. Marshall Space Flight Center,
Code CN22D Marshall Space Flight Center,
AL35812, Telephone (205) 544–4499

or via Internet on the NASA PALS (Program Automated Library System) located at:
http://issa–www.jsc.nasa.gov/cgi–bin/dsql+/ORAP?–h+palshome

2.1 APPLICABLE DOCUMENTS

2.1.1 NSTS–1700.7B, REV B, 13.01.1989

Safety Policy and Requirements for Payloads using the Space Transportation System
(Referenced in paragraph 9)

2.1.2 NSTS–1700.7B ADDENDUM, DEC. 95

Safety Policy and Requirements for Payloads using the International Space Station
(Referenced in paragraph 9)

2.1.3 GPQ–010, ISSUE 1 (INCLUDING GPQ–010 CHANGE NOTICE 01)

Product Assurance for ESA Microgravity Projects
(Referenced in paragraph 9.)

2.1.4 GPQ–010–PSA–101, ISSUE 2

Safety and Material Requirements for ESA Microgravity Payloads
(Referenced in paragraph 9)

2.1.5 GPQ–010–PSA–102, ISSUE 2

Reliability and Maintainability for ESA Microgravity Payloads
(Referenced in paragraph 9)

2.1.6 GPQ–010–PSA–106, ISSUE 2

Safety and Material Requirements for ESA Payloads on ISS (space exposed payloads)
(Referenced in paragraph 9)

DaimlerChrysler Aerospace, Bremen – All Rights Reserved – Copyright per DIN 34

2.1.7 GPQ–010–PSA–107, ISSUE 2

Reliability and Maintainability for ESA Payloads on ISS (on–orbit not maintainable)
(Referenced in paragraph 9)

2.2 REFERENCE DOCUMENTS

2.2.1 SSP 41002, REVISION I, 31.03.1999

International Standard Payload Rack to NASA/ESA/NASDA Modules Interface Control Document

(Referenced in paragraph 3.2)

2.2.2 SSP 41017 – PART1, REVISION C, 13.02.1998

Racks to Mini Pressurized Logistics Module Interface Control Document – Part 1

(Referenced in paragraph 3.2)

2.2.3 SSP 41017 – PART2, REVISION F, 13.11.1998

Racks to Mini Pressurized Logistics Module Interface Control Document – Part 2

(Referenced in paragraph 3.2)

2.2.4 SSP 57000, REV.D, 22.07.99

Pressurized Payload Interface Requirement Document

(Referenced in paragraph 1.2, 3.2, 5.1.1, 5.6)

2.2.5 SSP 41152 , REVISION B–ESA, 15.12.98

Interface Requirements Document International Standard Payload Rack (ISPR)

(Referenced in paragraph 3.2, 5.1.1)

2.2.6 NSTS 18798

Interpretations of NSTS Payload Safety Requirements (including updates to December 1995)

(Referenced in paragraph 9)

2.2.7 COL–RIBRE–STD–0005, ISSUE 2/A, 30.9.96

APM Flight Human Computer Interface Standard

(Referenced in paragraph 5.6.8.11, 5.6.9)

2.2.8 JBX–96168, 30.9.96

JEM Standard Payload Rack Requirements Document

DaimlerChrysler Aerospace, Bremen – All Rights Reserved – Copyright per DIN 34

(Referenced in paragraph 5.1.1)

2.2.9 OPS–ESA–PL–001, ISSUE 4, 15.09.99

MSM Operations Processes

(Referenced in paragraph 6)

2.2.10 SSP50200–04, ISSUE DRAFT/A, 10.11.97

SPIP Volume 4 : Payload Engineering Integration

(Referenced in paragraph 6)

2.2.11 COL–RIBRE–ICD–0070, ISSUE 4/–, 30.06.99

Columbus EGSE Interface Control Document

(Referenced in para 6.2.3.1)

2.2.12 SAMTO HB S–100 / KHB 1700.7B

Payload Ground Safety Handbook

(Referenced in para 7)

2.2.13 NSTS–13830, REV. C, DEC. 96

Implementation Procedure for NSTS Payloads System Safety Requirements
(Referenced in paragraph 9)

2.2.14 SSP 50313 – LATEST ISSUE

ISS Display and Graphic Commonality Standards
(http://139.169.159.8/idags/dgcs.html)
(Referenced in para 5.6.9)

2.2.15 SSP 50253 – LATEST ISSUE

Operations Data File Standards
(Referenced in para 5.6.8.3)

2.2.16 SSP 50254 – LATEST ISSUE

Operations Nomenclature
(Referenced in para 5.6.8.3)

2.2.17 CPI–RIBRE–PL–0007, ISSUE DRAFT, REV. A, 16.07.99

Columbus Launch Payload Integration Project Plan
(Referenced in para 6.2.2.1)

2.2.18 COL–RIBRE–SPE–0164, ISSUE DRAFT, REV. A, 29.02.2000

Columbus Pressurized Payload Interface Requirement Document
(Referenced in 5.5.2, 5.5.4, 5.12, 6.2.1.1)

DaimlerChrysler Aerospace, Bremen – All Rights Reserved – Copyright per DIN 34

2.2.19 COL–RIBRE–SPE–0165, – NOT YET AVAILABLE –

Columbus External Payload Interface Requirement Document
(Referenced in 5.5.4, 6.2.1.1)

2.2.20 COL–RIBRE–PL–0144, – NOT YET AVAILABLE –

ColumbusPressurized Payloads Generic Verification Plan
(Referenced in 6.2.1.2)

2.2.21 COL–RIBRE–PL–0145, – NOT YET AVAILABLE –

Columbus External Payload Generic Verification Plan
(Referenced in 6.2.1.2)

2.2.22 COL–RIBRE–ICD–0094, ISSUE DRAFT, REV. A, 29.02.2000

Columbus Pressurized Payloads Hardware Interface Control Document Template
(Referenced in 6.2.1.2)

2.2.23 COL–RIBRE–ICD–0090, ISSUE DRAFT, REV. A, 29.02.2000

Columbus Pressurized Payloads Software Interface Control Document Template
(Referenced in 6.2.1.2)

2.2.24 COL–RIBRE–ICD–0095, – NOT YET AVAILABLE –

Columbus External Payloads Hardware Interface Control Document Template
(Referenced in 6.2.1.2)

DaimlerChrysler Aerospace, Bremen – All Rights Reserved – Copyright per DIN 34

3 GENERAL DESCRIPTION OF THE INTERNATIONAL SPACE STATION

The ISS consists of pressurized and unpressurized elements that form a manned base in low earth orbit. The ISS is located in a 51.6 degree inclination orbit at an altitude ranging from 335 to 460 km (181 to 248 nautical miles).

The Space Station will provide the capability to conduct experiments in a microgravity environment in a wide range of areas such as materials sciences, life sciences, and other technology development and demonstration activities.

The Space Station includes the pressurized laboratory modules (U.S. Lab, Japanese Experiment Module (JEM), the COLUMBUS APM and the three Russian Research Modules), the Habitation Module, pressurized and unpressurized logistics elements, FGB and Service Module, Docking Modules and Soyuz Assured Crew Rescue Vehicles (ACRV).

The pressurized modules are attached to the truss assembly. The truss assembly also accommodates the unpressurized logistics elements, attached payloads, and equipment required for station operation, such as solar arrays, etc. The Space Station configuration is shown in Figure 3–1, International Space Station Configuration.

The basic accommodation for users of the ESA, NASA and NASDA pressurized modules is an International Standard Payload Rack (ISPR). A set of basic utilities are provided at all ISPR locations. Other optional utilities are provided to selected ISPR locations in each laboratory module.

”Attached payloads” are external payloads operated outside of the pressurized modules.

3.1 INTERNATIONAL SPACE STATION ELEMENTS

The ISS elements include the Integrated Truss Assembly, resource nodes, laboratory modules, habitation module and logistics elements. This document provides only summary and non–authoritative data on ISS elements other than the European APM. The official and more detailed information on these elements is contained in the appropriate documentation of the ISS International Partners.

3.1.1 INTEGRATED TRUSS ASSEMBLY

The Integrated Truss Assembly (ITA) serves as a structural platform for power collection and distribution, thermal dissipation, and attached payloads, as well as housing several other external systems.
The ITA accommodates utility distribution trays for fluid lines and cables, and provides for Extra–Vehicular Activity (EVA) support equipment such as handholds and lighting. Utility ports for external attached payloads are provided on the ITA. Truss–mounted equipment includes also the Solar Arrays Guidance, part of the Navigation and Control, Propulsion, Communications and Tracking System.

DaimlerChrysler Aerospace, Bremen – All Rights Reserved – Copyright per DIN 34

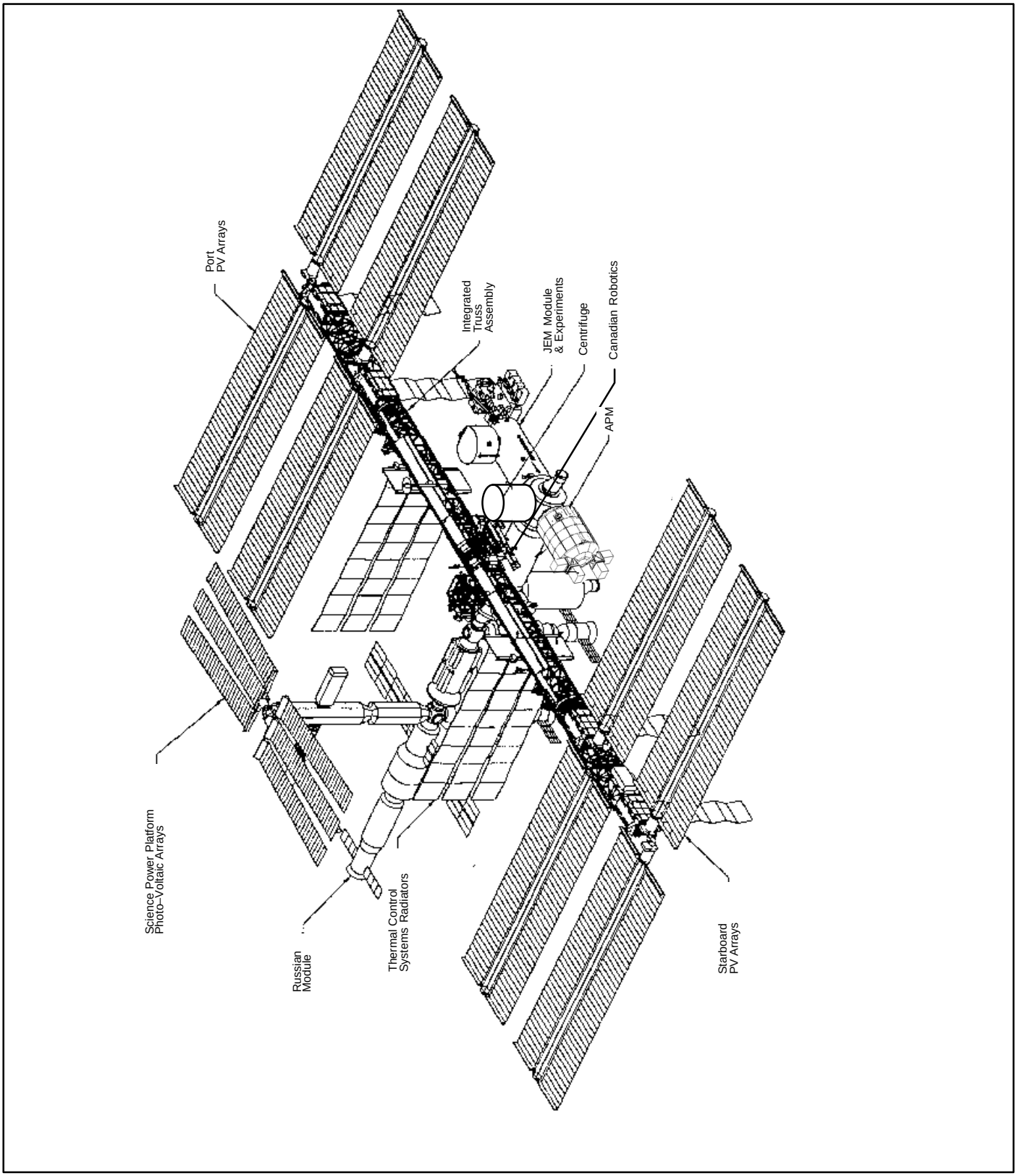

FIGURE 3–1 INTERNATIONAL SPACE STATION CONFIGURATION

DaimlerChrysler Aerospace, Bremen – All Rights Reserved – Copyright per DIN 34

3.1.2 NODE ELEMENTS

The node elements comprise the U.S. and the Russian docking nodes. The U.S. nodes are pressurized volumes which contain four radial and two axial berthing ports. These nodes will interface with the U.S. Laboratory and transition structure and the cupola respectively. The node 2 allows for the attachment of a pressurized logistics module to the nadir radial port.

The Russian docking node contains six radial and two axial parts. This element will allow for attachment of the Russian science modules.

3.1.3 SERVICE MODULE AND FGB

The Russian Service Module is a pressurized module which contain basic housekeeping functions, life support functions, primary and secondary power, thermal control, and limited payload operations (Service Module 1).

The Russian FGB is a pressurized volume which contains the regenerative life support equipment for the Russian Environmental Control and Life Support System (ECLSS) activities.

3.1.4 UNITED STATES LABORATORY

The USL houses 13 ISPR locations. The internal Layout is shown in Figure 3.1.4–1, US Laboratory Internal Layout.

DaimlerChrysler Aerospace, Bremen – All Rights Reserved – Copyright per DIN 34

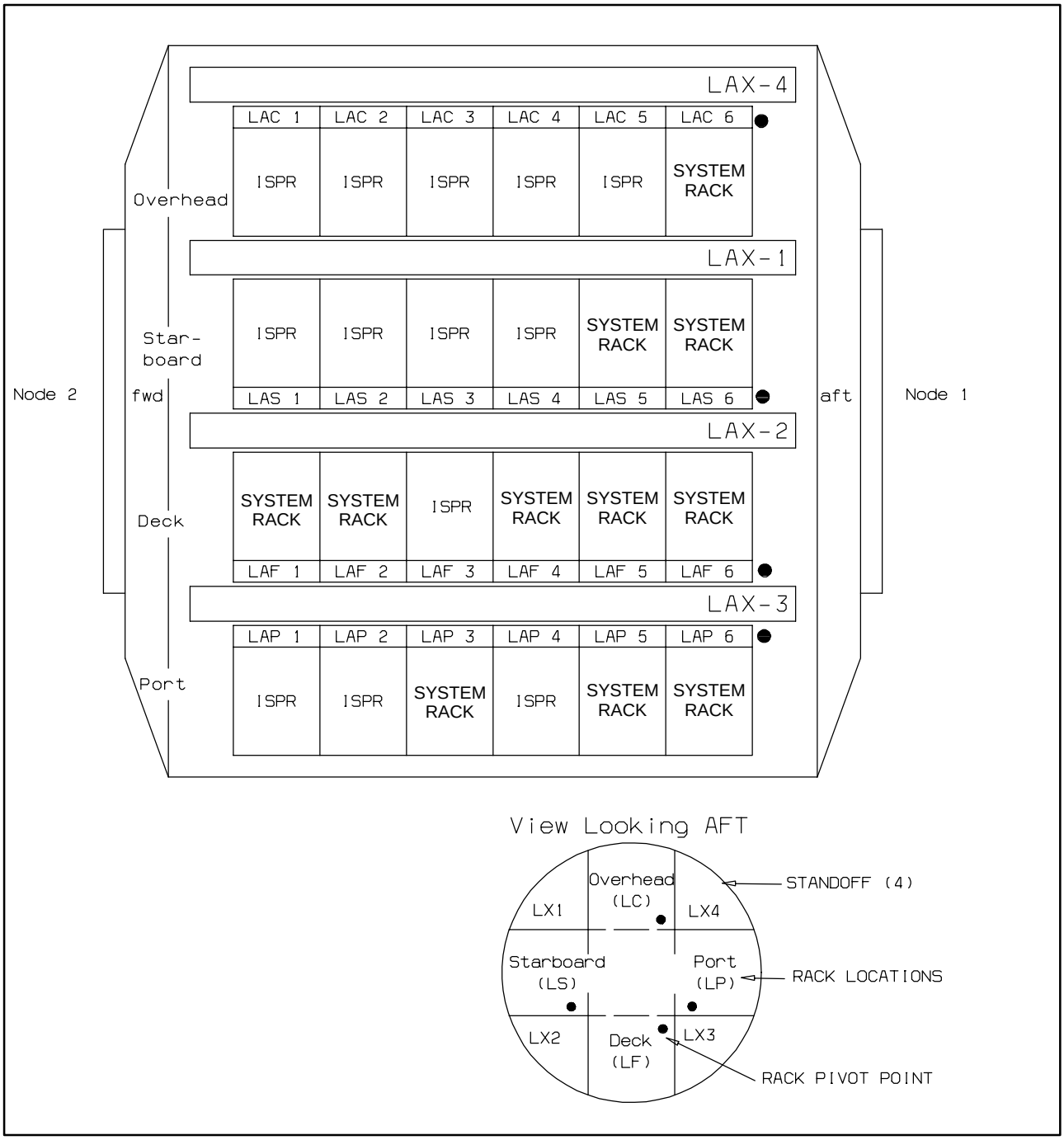

FIGURE 3.1.4–1 US LABORATORY INTERNAL LAYOUT

3.1.5 JAPANESE EXPERIMENT MODULE PRESSURIZED MODULE

The JEM Pressurized Module (PM) internal layout is shown in Figure 3.1.5–1, Japanese Experiment Module (JEM) PM Internal Layout. It can accommodate 23 racks with 10 ISPR locations allocated for users.

DaimlerChrysler Aerospace, Bremen – All Rights Reserved – Copyright per DIN 34

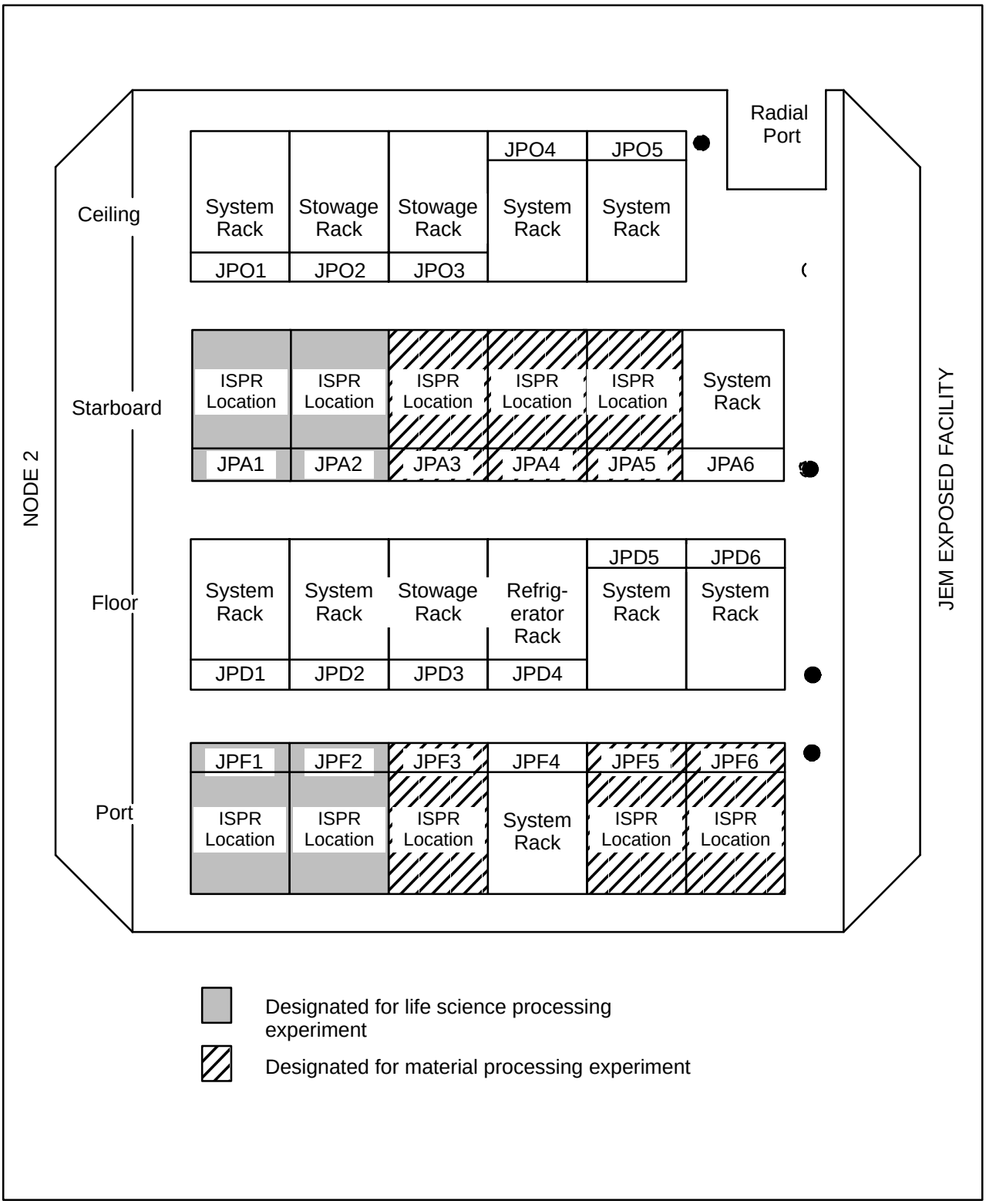

FIGURE 3.1.5–1 JAPANESE EXPERIMENT MODULE (JEM) PM INTERNAL LAYOUT

DaimlerChrysler Aerospace, Bremen – All Rights Reserved – Copyright per DIN 34

The PM enables activities such as

- Intra–Vehicular Activity (IVA)
- general science and technology development research
- control/monitoring of payloads attached to the JEM's External Facility (EF)
- IVA control/monitoring of the JEM remote manipulator system.

3.1.6 JAPANESE EXPERIMENT MODULE EXPOSED FACILITY

The JEM EF provides an unpressurized work area for scientific observations, communication experiments and other experiments which require exposure to the space environment.

The JEM EF is attached to the PM; its configuration is shown in Figure 3.1.6–1, JEM Pressurized Module and Exposed Facility.

DaimlerChrysler Aerospace, Bremen – All Rights Reserved – Copyright per DIN 34

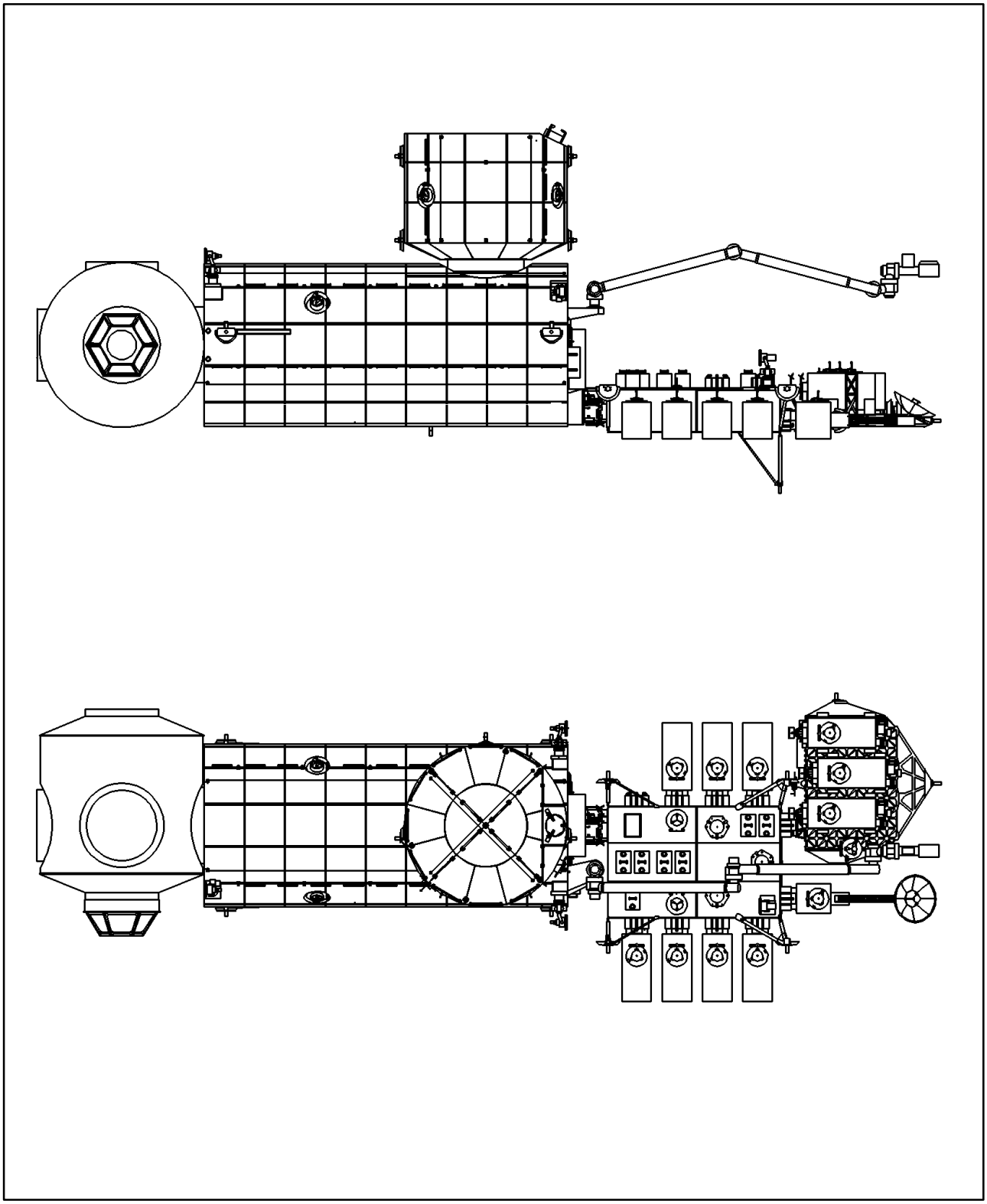

FIGURE 3.1.6–1 JEM PRESSURIZED MODULE AND EXPOSED FACILITY

DaimlerChrysler Aerospace, Bremen – All Rights Reserved – Copyright per DIN 34

3.1.7 COLUMBUS ATTACHED PRESSURIZED MODULE

The APM will be used to conduct scientific or technological research. The module provides locations for 10 ISPR's and 3 storage racks. Details of the APM flight configuration are described in chapter 4.

Figure 3.1.7–1, APM Overall Configuration, illustrates the overall configuration of the APM.

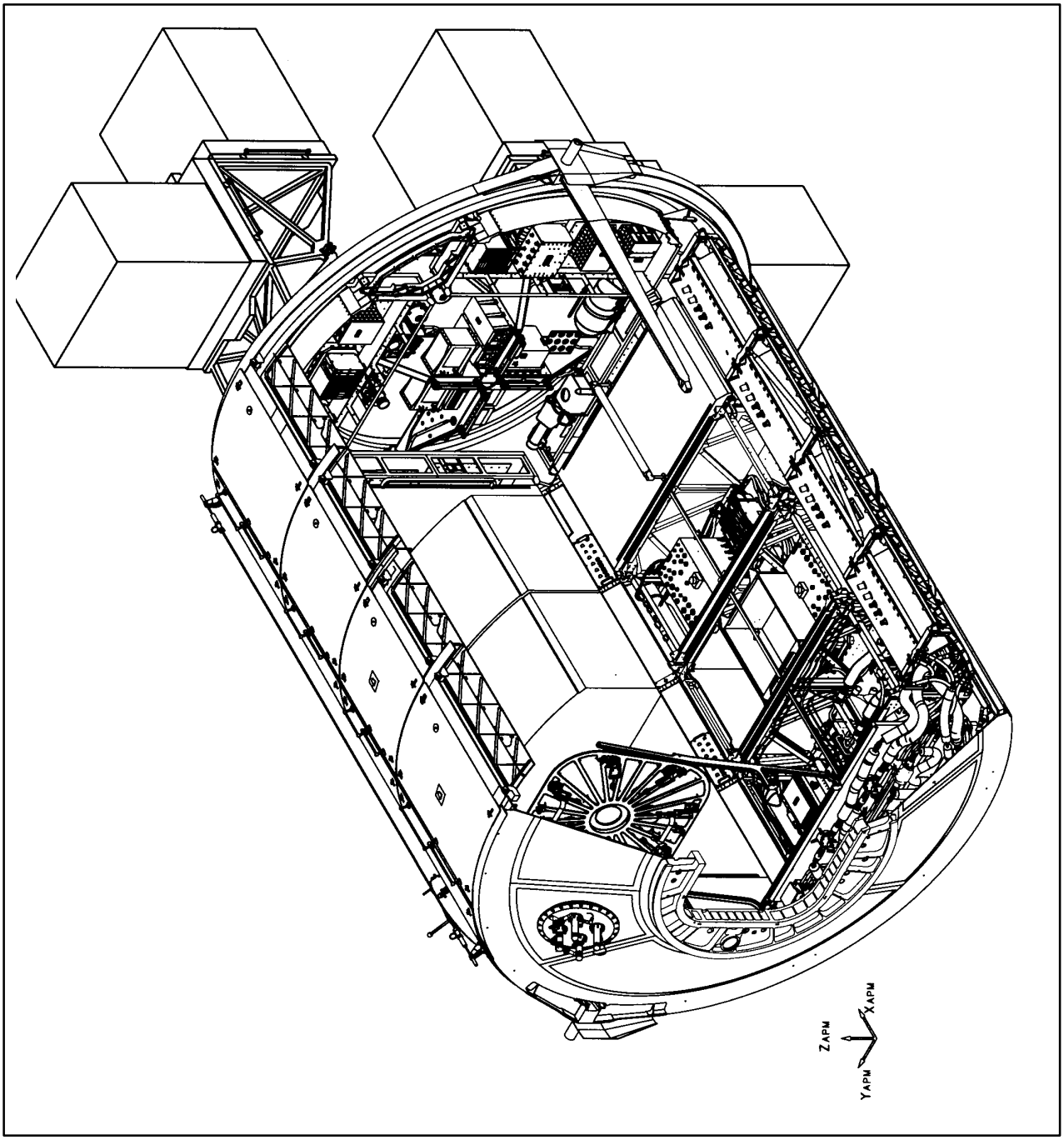

FIGURE 3.1.7–1 APM OVERALL CONFIGURATION

DaimlerChrysler Aerospace, Bremen – All Rights Reserved – Copyright per DIN 34

Figure 3.1.7–2, Columbus Attached Pressurized Module, illustrates the rack configuration topology of the APM.

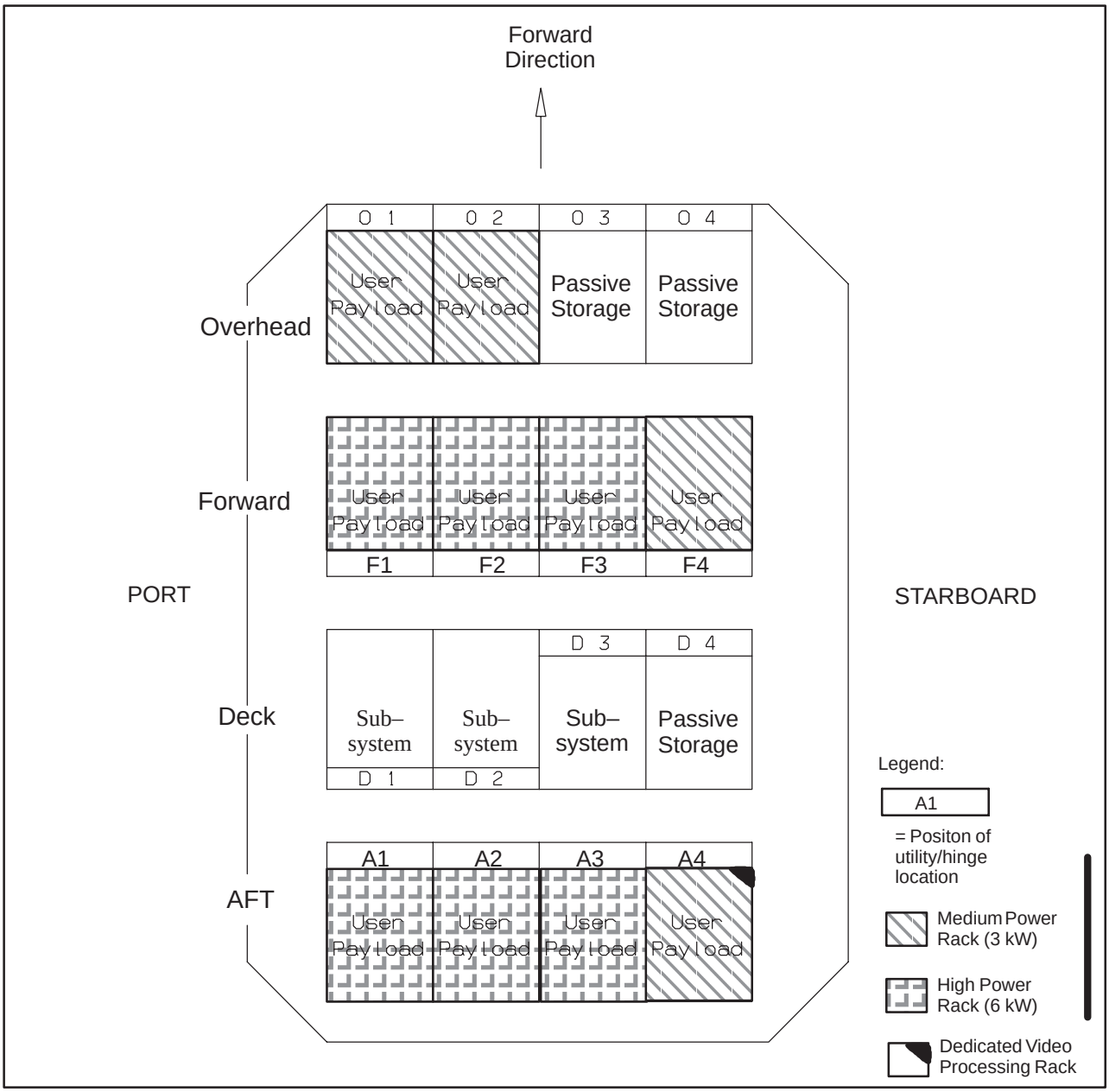

FIGURE 3.1.7–2 COLUMBUS ATTACHED PRESSURIZED MODULE

DaimlerChrysler Aerospace, Bremen – All Rights Reserved – Copyright per DIN 34

3.1.8 COLUMBUS EXTERNAL PAYLOAD FACILITY

The APM provides attachment locations at the outer aft end cone with interfaces for Express Pallet Adapters (ExPAs). Express Pallet Adapters are standardized, removeable platforms which allow the accommodation of external payloads. The ExPA is described in section 3.3 . Four ExPA locations as shown in figure 3.1.8–1, Columbus External Payload Facility provide functional interfaces and payload services.

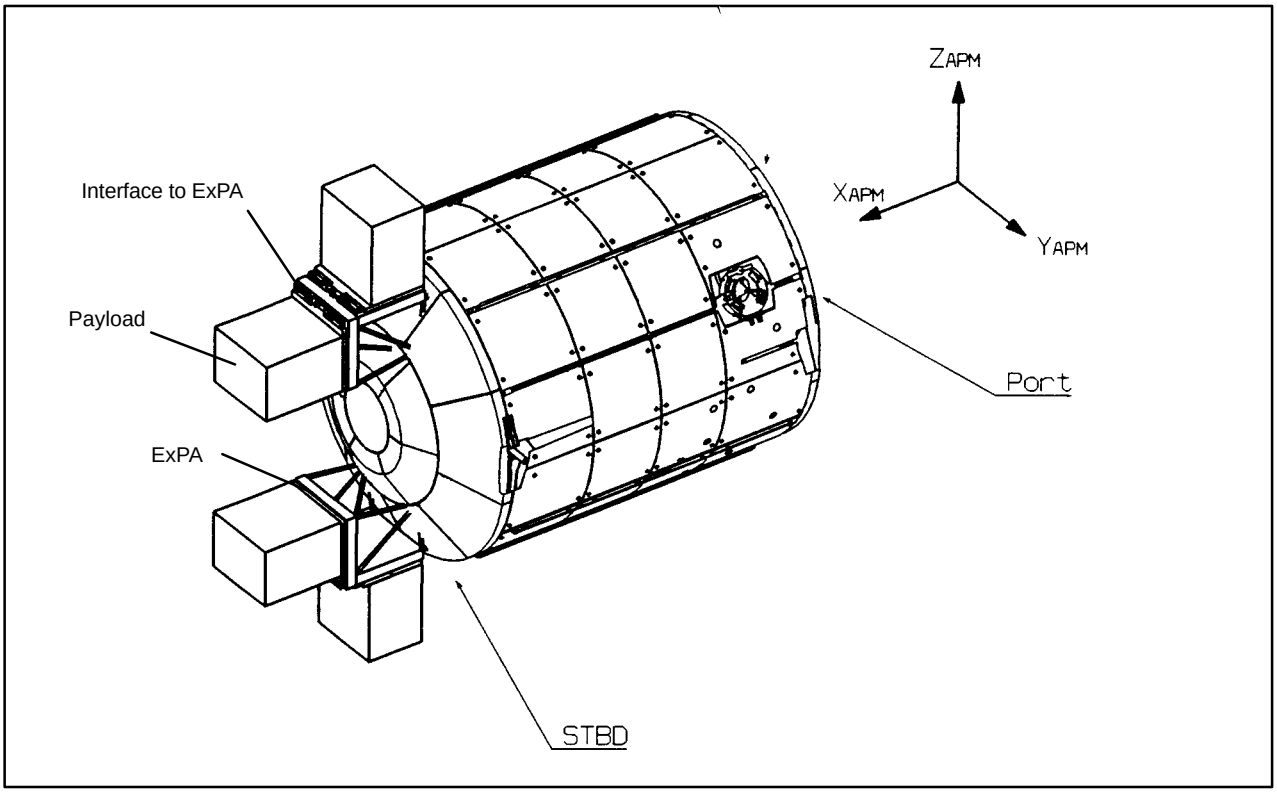

FIGURE 3.1.8–1 COLUMBUS EXTERNAL PAYLOAD FACILITY

3.1.9 RUSSIAN RESEARCH MODULES

The three Russian Research Modules provide pressurized volumes for scientific payload. TBD attachments for external payloads are also available.

3.1.10 HABITATION MODULE

The Habitation Module provides facilities for sleeping, crew leisure time, cooking and dining, exercise and health monitoring equipment, shower, handwash, waste management, as well as provisions for personal hygiene for the crew aboard the Space Station. There are no ISPR locations in the Habitation Module.

DaimlerChrysler Aerospace, Bremen – All Rights Reserved – Copyright per DIN 34

3.1.11 LOGISTICS ELEMENTS

The logistics elements include both pressurized and unpressurized elements. For transportation of APM payloads the pressurized logistics element of the Space Station is the Multi–Purpose Logistics Module (MPLM). The MPLM is transported to the Space Station via the National Space Transportation System (NSTS) Shuttle Orbiter.

3.1.11.1 MULTI–PURPOSE LOGISTICS MODULE

The primary purpose of the MPLM is to support the delivery and return of Systems, Stowage, and Payload Racks to the Space Station on utilization and logistics flights. The MPLM will only be docked to the station during the STS visit. All transfers to and from the MPLM must occur during the docking phase.

Access to the MPLM is provided through a common ISS–compatible 1270 x 1270 mm (50 x 50 inch) hatch on the forward end, and a 2438.4 mm (96 inch) diameter externally removable ground processing closure on the aft end (which is not used on orbit).

The interior of the MPLM accommodates 16 rack positions along the perimeter, thus leaving a 2133.6 x 2133.6 mm (84 x 84 inch) aisle. To maximize the cargo delivery mass fraction, the aisle provides additional storage capability. Five of the sixteen rack positions are powered to energize refrigerators, freezers and payload; the remaining eleven positions are passive.

The MPLM will be able to accommodate three refrigerator/freezer racks available for food supply and payloads. Each rack position accommodates a 2032 mm (80 inch) rack or a respective functional unit. Only the powered racks will require subsystem support. Since the remaining rack positions are passive, they will have no subsystem support.

The eleven passive storage racks accommodate rack drawers of different heights, widths and depths enabling both vertical and horizontal mounting. Figure 3.1.11.1–1, Mini Pressurized Logistics Module Rack Layout, shows the MPLM rack layout.

DaimlerChrysler Aerospace, Bremen – All Rights Reserved – Copyright per DIN 34

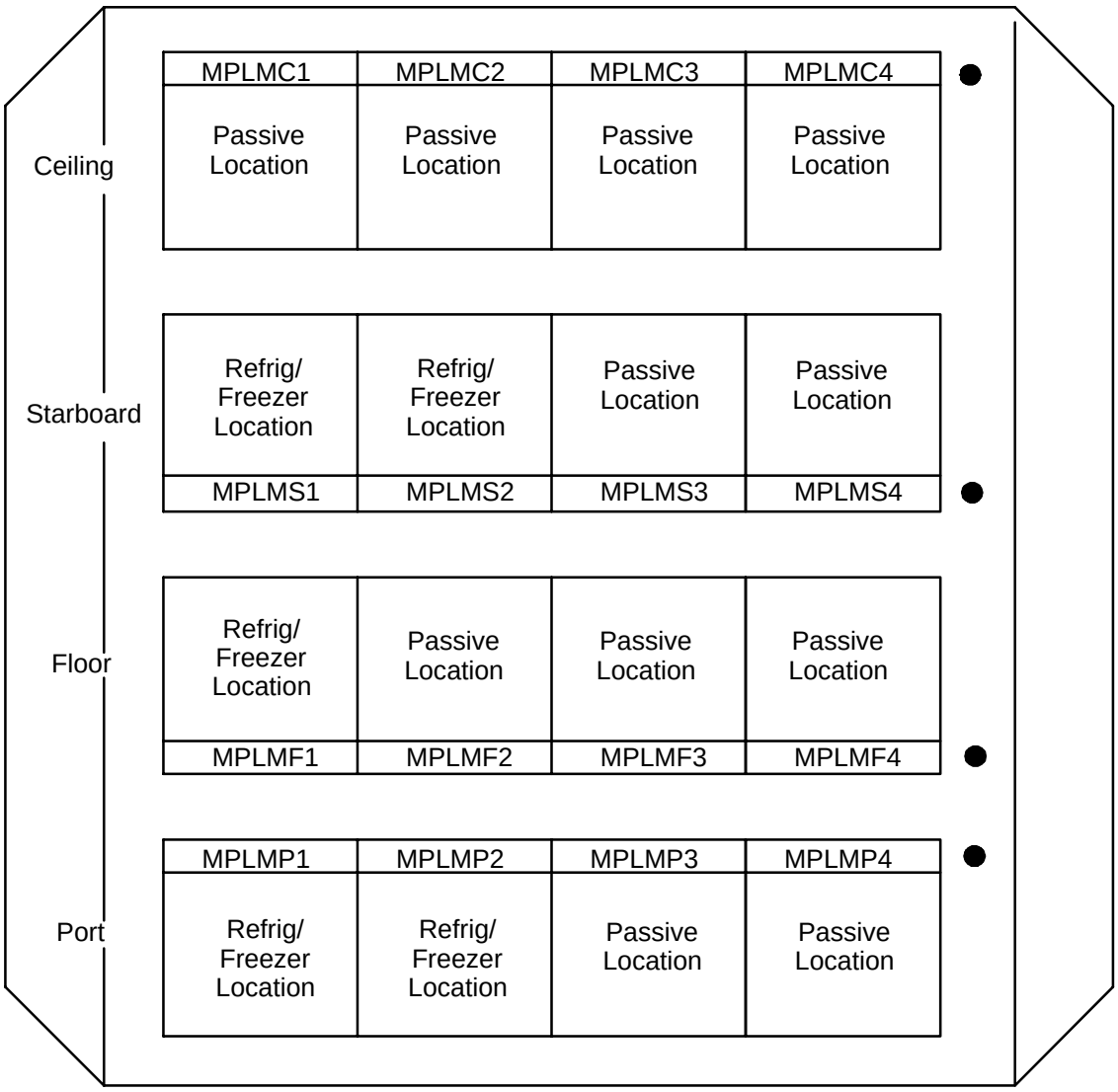

Note: Refrigerator/freezer rack locations can also accommodate passive racks.

FIGURE 3.1.11.1–1 MULTI PURPOSE LOGISTICS MODULE RACK LAYOUT

3.1.11.2 ON–ORBIT EXTERNAL PAYLOAD CONFIGURATION AND SERVICING BY THE SPDM

The Special Purpose Dextrous Manipulator (SPDM) is a two–armed manipulator. Permanently stowed on–board the International Space Station (ISS) using the Mobile Remote Servicer (MRS) as prime (home) base, the SPDM can either operate from the outer end of the Space Station Remote Manipulator (SSRMS) or from any suitable equipped location on the Space Station(i.e., providing a Power / Data Grapple Fixture (PDGF)).

DaimlerChrysler Aerospace, Bremen – All Rights Reserved – Copyright per DIN 34

The SPDM is designed for dextrous robotic tasks such as, e.g., ORU handling and change–out, temporary accommodation of P/Ls, operation of EVR tools. Depending on the type of interface to be operated on a P/L, the SPDM will either directly attach its arm (s) via its ORU Tool Change–Out Mechanism (OTCM) to the P/L interface or via a special tool available from one of its tool holders with the tool attached to the OTCM.

The SPDM is able to operate on / for the COLUMBUS External Payload Facility (EPF), e.g. for first time installation of P/L facilities or for the exchange of P/L facilities.

The EPF is designed to accommodate the passive half of a External Payload Mechanism (ExPM) (which is also called Flight Releasable Attachment Mechanism) providing attachment brackets, alignment guides and electrical connectors. The opposite part of the ExPM is the External Payload Adapter (ExPA) which provides the capability to accommodate payloads. The ExPA is operated by the SPDM for off–loading / loading from / to a cargo carrier and installation / removal to / from the EPF. The SPDM is able to directly interface via its OTCM with the ExPA and to operate the ExPA attach mechanism via its built–in socket drive.

Move MRS to ULC

To operate on / for the COLUMBUS EPF, the MRS needs to be moved to a position on the Station truss from which a berthed Unpressurised Logistics Carrier (ULC) (e.g., EXPRESS pallet) is accessible by a combined SSRMS / SPDM.

Transfer SPDM to ULC

At that truss position the SSRMS is deployed (assuming its activation and C/O was performed in advance) and positioned as such that grappling of the SPDM on the MRS is possible. The SPDM is grappled by the SSRMS via the PDGF provided at one end of its central body. On command, the SPDM is released from the MRS, cleared off the MRS by the SSRMS and transferred towards the ULC where the SPDM is oriented and positioned as required to operate the P/L to be off–loaded.

Perform Self–Stabilisation

To off–load a change–out (a changed output is an ExPA to be replaced on the EPF) P/L from the ULC and being operated on the end of the SSRMS, the SPDM needs to grasp with one of its arm (e.g., arm #1) (note, numbering of SDPM arms is done only to allow for a more easy identification) a grasp fixture provided on the ULC worksite in order to stabilised itself.

Remove Change–Out P/L from ULC

Fully stabilised, the SPDM directly attaches its arm #2 via the OTCM to the P/L I/F. On command, the P/L attach mechanism is operated (disengaged) by driving the mechanism via the OTCM built–in socket drive. With the mechanism fully disengaged, the P/L is lifted and cleared off the ULC by adequate arm #2 movements.

DaimlerChrysler Aerospace, Bremen – All Rights Reserved – Copyright per DIN 34

Temorary Storage of Change–Out P/L on SPDM

To bring the off–loaded P/L to the EPF, it needs to be temporary stowed on the SPDM ORU Temporary Platform (OTP) prior the MRS moves along the truss to a position from which the EPF is within the reach of the SSRMS / SPDM. To temporary stow the P/L the SPDM is oriented such that the OTP is within the reach of arm #2 (which is holding the P/L), the P/L is moved towards the OTP until contact and secured to the OTP by engaging its attach mechanism.

Move MRS to COLUMBUS

With the P/L secured to the OTP, the SPDM releases arm #1 from the ULC and the MRS starts moving along the truss, there is no need to neither stow the SPDM on the MRS nor to release arm #2 from the P/L on the OTP.

Perform Self Stabilisation

At the truss position suitable for APM reach, and after the MRS is adequately configured for SSRMS / SPDM operations, the SSRMS moves the SPDM towards the EPF to work on and, at the EPF, the SPDM is oriented and positioned as required to perform self–stabilisation by grasping with arm #1 on an EPF provided (or wherever located) grasping fixture.

Remove Return P/L from EPF

Fully stabilised, arm #2 is released from the change–out P/L on the OTP, is driven towards the EPF and is directly attached via the OTCM to the return P/L I/F. On command, the P/L attach mechanism is operated (disengaged) by driving the mechanism via the OTCM built–in socket drive. With the mechanism fully disengaged, the return P/L is lifted and cleared off the EPF by adequate arm #2 movements.

Remove Change–Out P/L from SPDM

To remove the change–out P/L from the OTP, arm #1 (used for stabilisation) is released from the EPF (or wherever located) grasping fixture, is driven towards the OTP and is directly attached via the OTCM to the P/L I/F. On command, the P/L attach mechanism is operated (disengaged) by driving the mechanism via the OTCM built–in socket. With the mechanism fully disengaged, the P/L is lifted and cleared off the OTP by adequate arm #1 movements.

Temporary Stowage Return P/L on SPDM

To clear arm #2 to perform SPDM self–stabilisation prior installation of the change–out P/L on the EPF, the return P/L needs to be stowed on the OTP. To temporary stow the return P/L, the SPDM is orientated as such that the OTP is within the reach of arm #2, the return P/L is moved towards the OTP until contact and secured to the OTP by engaging its attach mechanism. With the return P/L secured to the OTP, arm #2 is released from the P/L I/F and withdrawn from the OTP.

DaimlerChrysler Aerospace, Bremen – All Rights Reserved – Copyright per DIN 34

Perform Self–Stabilisation

For self–stabilisation prior installation of the change–out P/L on the EPF, arm #2 is driven towards the EPF and grasping a grasp fixture provided on the EPF or at any other suitable location on COLUMBUS.

Install Change–Out P/L on EPF

Fully stabilised, arm #1 moves the change–out P/L towards its assigned EPF where it is secured by engaging its attach mechanism. With the P/L secured to the EPF, arm #1 is released from the P/L I/F and withdrawn from the EPF.

Move MRS to ULC

To move the return P/L back to the ULC, the SPDM releases arm #2 from the EPF (or from COLUMBUS) and the MRS starts moving along the truss, there is no need to stow the SPDM on the MRS.

Perform Self–Stabilisation

At the truss position from which the ULC is within the reach of the SSRMS / SPDM, and after the MRS is adequately configured for SSRMS / SPDM operations, the SSRMS moves the SPDM towards the ULC. At the ULC the SPDM is orientated as required to perform self–stabilisation, arm #1 is driven towards the ULC and grasping a grasp fixture provided on the ULC.

Remove Return P/L from SPDM

Arm #2 is driven towards the return P/L on the OTP and is directly attached via the OTCM to the P/L I/F. On command, the P/L attach mechanism is operated (disengaged) by driving the mechanism via the OTCM built–in socket drive. With the mechanism fully disengaged, the P/L is lifted and cleared off the OTP by adequate arm #2 movements.

Install Return P/L on ULC

The return P/L is moved towards its assigned position on the ULC and secured to the ULC by engaging its attach mechanism. With the P/L secured, arm #2 is released from the P/L I/F and withdrawn from the ULC.

As this completes P/L exchange for the EPF, arm #1 used for self–stabilisation is released from the ULC and withdrawn. The SPDM is withdrawn from the ULC and positioned as required for further operations or for stowage on the MRS.

DaimlerChrysler Aerospace, Bremen – All Rights Reserved – Copyright per DIN 34

3.2 INTERNATIONAL STANDARD PAYLOAD RACK

Payloads are primarily accommodated within International Standard Payload Racks. ISPRs are defined as racks which are in principle interchangeable on–orbit between the pressurized modules of the National Aeronautics and Space Administration (NASA), the European Space Agency (ESA), and the National Space Development Agency of Japan (NASDA) laboratories. The Russian Modules do not allow the accommodation of ISPRs.
The ISPR locations in the APM provide interfaces for the accomodation of European and US ISPRs. Special provisions are available for US racks hosted in the APM, e.g. for the data management of US payloads. ISPR location interfaces requirements are defined by reference document 2.2.5 and controlled by Ref. 2.2.1 for laboratory modules and reference document. 2.2.2 for the MPLM. The APM supports the accommodation of ARIS equipped racks at the lateral locations.

The standard payload interfaces include mechanical payload rack–to–module attachments, a utility interface panel (located on the stand–off) and system interfaces. Additional system interfaces are provided at some ISPR locations and are categorized as standard option utilities or module unique utilities. Standard option utilities are only available at selected locations. Module unique utilities are available in one laboratory at selected locations.

Table 3.2–1, APM ISPR Location Utiltity Interfaces, identifies utility interface availability by ISPR location within the APM. The rack location code refers to the ISPR topology described in figure 3.1.7–1, Columbus Attached Pressurized Module.

For further information on the system interfaces provided to APM located payload racks see sections 4 and 5 of this document.

DaimlerChrysler Aerospace, Bremen – All Rights Reserved – Copyright per DIN 34

TABLE 3.2–1 APM ISPR LOCATION UTILITY INTERFACES

Interface / Rack Location 1)	Main Power [kW]	Auxiliary Power (1.2 kW)	Video/ High Rate Data 2)	APM MIL 1553B Payload Bus 3)	US–Lab MIL 1553B Payload Bus 4)	APM LAN 802.3 4)	US–Lab LAN 802.3 11)	Time Distribution 5)	Fire Detection/ Power Maintenance 6)	EWACS 7)	Water Cooling	Vacuum	Venting	GN_2	Fibre Optics Link 8)	CPVS I/F 9)	ARIS 10)
F1	6	X	X	X	X	X	X	X	X	X	X	X	X	X	X		X
F2	6	X	X	X	X	X	X	X	X	X	X	X	X	X	X		X
F3	6 12)	X	X	X	X	X	X	X	X	X	X	X	X	X	X		X
F4	3	X	X	X	X	X	X	X	X	X	X	X	X	X	X		X
A1	6	X	X	X	X	X	X	X	X	X	X	X	X	X	X		X
A2	6	X	X	X	X	X	X	X	X	X	X	X	X	X	X		X
A3	6 12)	X	X	X	X	X	X	X	X	X	X	X	X	X	X		X
A4	3	X	X	X	X	X	X	X	X	X	X	X	X	X	X	X	X
O1	3	X	X	X	X	X	X	X	X	X	X		X	X	X		
O2	3	X	X	X	X	X	X	X	X	X	X		X	X	X		

Note:

1) Rack Location Nomenclature: O=Overhead; A=AFT; F=Forward
2) Three fibre optic lines for video/sync and high rate data transmission routed to the Video Data Processing Unit. Interface will be used on a shared basis.
3) Nominal and redundant MIL 1553B interface is provided. Interface will be used by European payloads performing data transfer via the APM DMS.
3) Nominal and redundant MIL 1553B interface is provided. Interface will be used by US payloads hosted in the APM performing data transfer via the US–Lab Payload MDM.
4) Nominal and redundant APM LAN interface is provided. The APM supports one IEEE 802.3 LAN node per ISPR
5) Time is distributed by broadcast via the APM MIL 1553 payload bus.
6) Fire Detection and Suppression (FDS) interface for smoke sensor data, air circulation fan, smoke indicator and power maintenance switch.
7) EWACS interface to alert crew and ground about hazardous conditions.
8) Two fibre optic lines used for high rate data transmission directly to the US–Lab. I/F will be used by US racks.
9) Central Payload Video System (CVPS) is a payload provided outfitting option to enhance payload video processing capabilities.
10) ARIS usage possible
11) LAN–2 (non redundant) US–Lab LAN interface is provided. The APM supports one IEEE 802.3 LAN node per ISPR.
12) PDU outlets are shared between rack positions A3 and F3 and the Exposed Payload Facility

DaimlerChrysler Aerospace, Bremen – All Rights Reserved – Copyright per DIN 34

3.2.1 INTERNATIONAL STANDARD PAYLOAD RACK SYSTEM INTERFACE

The interface plane for the rack utilities is at the utility interface panel as shown schematically in Figure 3.2.1–1, ISPR Utility Interface.

In addition to standard ISPR‘s (see chapter 5.1.1) other rack structures which are compatible with the ISPR location interfaces can also be used by the Space Station partners.

Payload racks can be outfitted with components provided by the users or the ISS Programme partners.

DaimlerChrysler Aerospace, Bremen – All Rights Reserved – Copyright per DIN 34

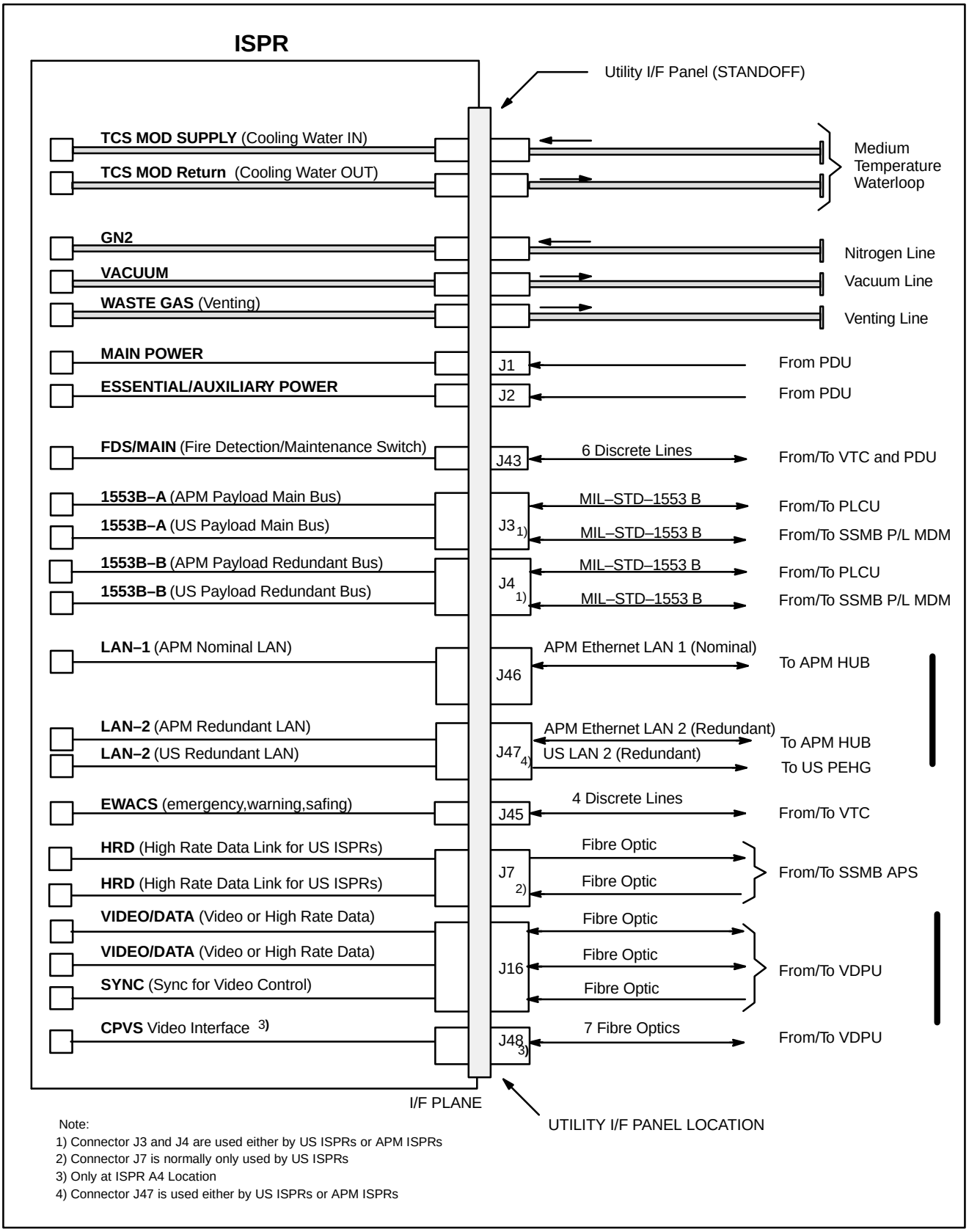

Note:
1) Connector J3 and J4 are used either by US ISPRs or APM ISPRs
2) Connector J7 is normally only used by US ISPRs
3) Only at ISPR A4 Location
4) Connector J47 is used either by US ISPRs or APM ISPRs

FIGURE 3.2.1–1 ISPR UTILITY INTERFACE

DaimlerChrysler Aerospace, Bremen – All Rights Reserved – Copyright per DIN 34

3.3 EXPRESS PALLET ADAPTER

External payloads requiring space exposure or viewing to nadir, zenith or line of Flight are accommodated on Express Pallet Adapters (ExPAs). ExPAs are interchangeable platforms which can be attached either to NASA Express Pallets or the Columbus External Payload Facility (CEPF). The four attachment locations of the CEPF provide interfaces for European and US payloads on an exclusive basis, i.e. a specific location can be used either by an European or US–payload.
The interfaces include mechanical attach and guidance mechanisms which support the interchangeability by means of Space Station Remote Manipulator System (SSRMS) operations.

The following payload interfaces and services are supported at each ExPA location by the CEPF:

- On–orbit payload mass capability of 226.5 kg (this weight does not include the adapter itself)
- TBD payload envelope
- two redundant 120 V power feeds per CEPF
- In total 2.5 KW electrical power for all ExPA locations
- Interface to APM MIL 1553B payload bus for two Remote Terminals (RTs)
- Interface to APM nominal and redundant LAN
- Interface to US–Lab 1553B payload bus for two Remote Terminals (RTs)
- Interface to US–Lab LAN–2
- Hardwired I/O lines for payload monitoring and safing commands
- One interface to the APM High Rate Data System via VDPU (electrical TAXI link)
- Passive thermal control by payloads

There is no water, vaccum, venting, GN2, EWACS, and PFM NTSC video interface on the ExPA. Time distribution will be performed via the APM payload MIL bus.

Figure 3.3–1, Express Pallet Adapter, shows a preliminary configuration in isometric view. The ExPA connector interfaces are shown in figure 3.3–2. The on–orbit coordinate system is shown in figure 3.3–3.

DaimlerChrysler Aerospace, Bremen – All Rights Reserved – Copyright per DIN 34

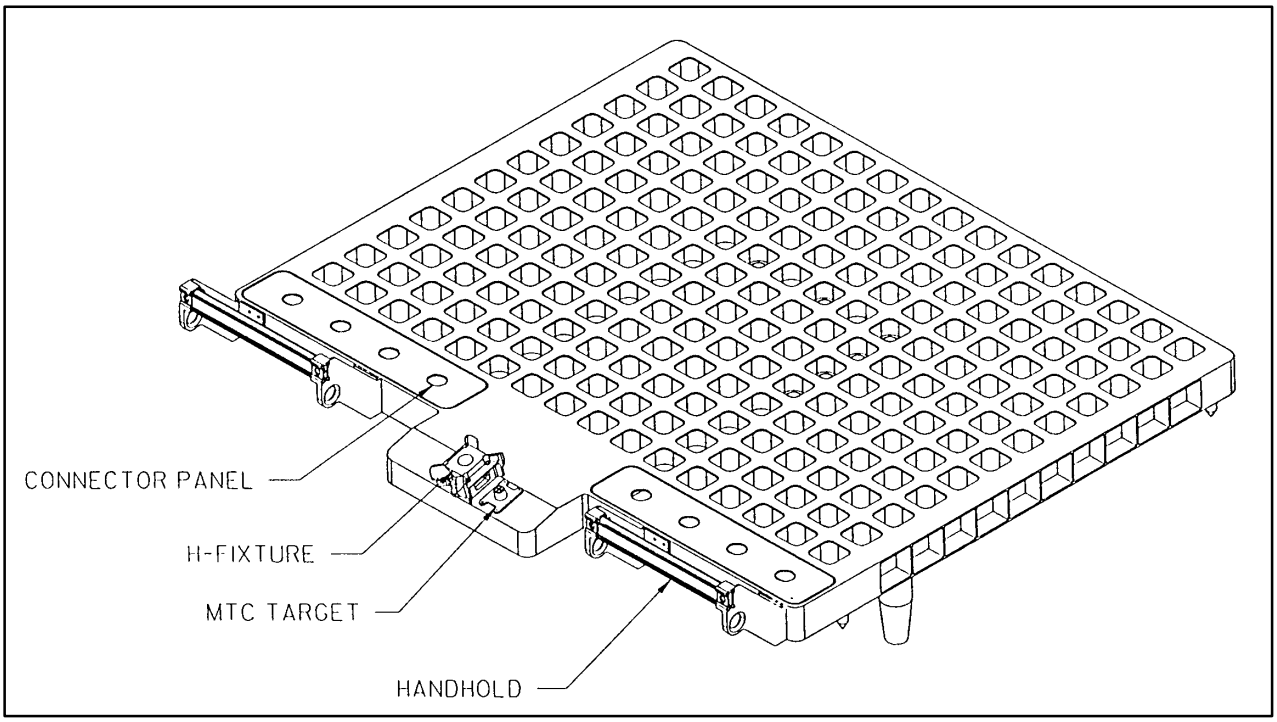

FIGURE 3.3–1 EXPRESS PALLET ADAPTER

TBD

FIGURE 3.3–2 EXPA CONNECTOR INTERFACES

DaimlerChrysler Aerospace, Bremen – All Rights Reserved – Copyright per DIN 34

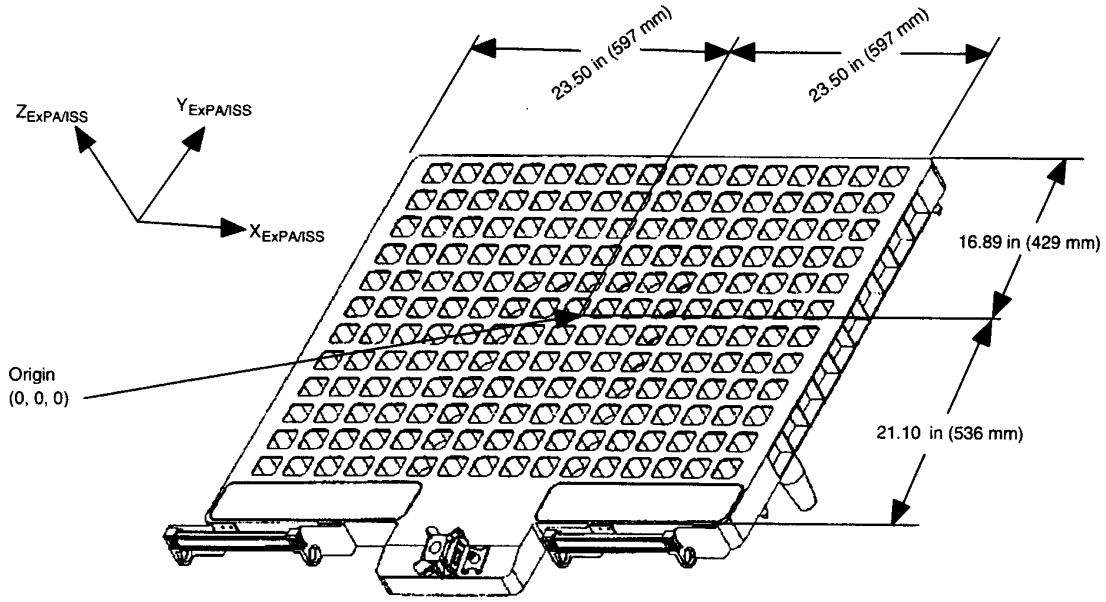

NAME: ExPA On-orbit Coordinate System

TYPE: Rotating Right-Handed Cartesian, Body-Fixed

DESCRIPTION: The ExPA will be attached to the ExP so that the coordinate axes are nominally parallel to each other and the Space Shuttle orbiter axes X_R, Y_R, and Z_R. Represents forward-mounted ExPAs per Figure 3-5.

ORIGIN: The origin is located at the center of the payload envelope on the X-Y plane of the ExPA.

ORIENTATION:

$X_{ExPA/ISS}$ The X-axis is parallel to the Space Station X_R-axis and positive in the direction of flight when attached to the Space Station.

$Y_{ExPA/ISS}$ The Y-axis is parallel to the Space Station Y_R-axis.

$Z_{ExPA/ISS}$ The Z-axis is parallel to the Space Station Z_R-axis and positive toward nadir when the ExP is attached to the nadir side of the ITS and positive toward zenith when attached to the zenith side of the ITS.

SUBSCRIPT: ExPA/ISS

FIGURE 3.3–3 EXPRESS PALLET ADAPTER ON–ORBIT COORDINATE SYSTEM (TBC)

DaimlerChrysler Aerospace, Bremen – All Rights Reserved – Copyright per DIN 34

3.4 CENTRE AISLE PAYLOADS

The APM provides two locations to connect centre aisle payloads to the APM power and data communication interface. The connection interfaces are called Standard Utility Panels (SUPs) which are located in the lower stand–offs. Detailed information about the location can be obtained from section 4.2.2, Centre Aisle Payloads. Mechanical accommodation of centre aisle payloads can be performed at the deck rack seat tracks.

The following payload interfaces and services are supported at SUP 1 and 4 location for centre aisle payloads:

- one 120 V power feeder
- Interface to APM MIL 1553B payload bus for one Remote Terminal
- Interface to APM nominal and redundant LAN
- Interface to APM VDPU either for PFM NTSC Video or high rate data
- Smoke Sensor interface
- Emergency and Warning measurements, and Safing commands (EWACS)
- Passive thermal control by payloads

There is no water, vaccum, venting, and GN2 interface at the SUP. Time distribution will be performed via the APM payload MIL bus.

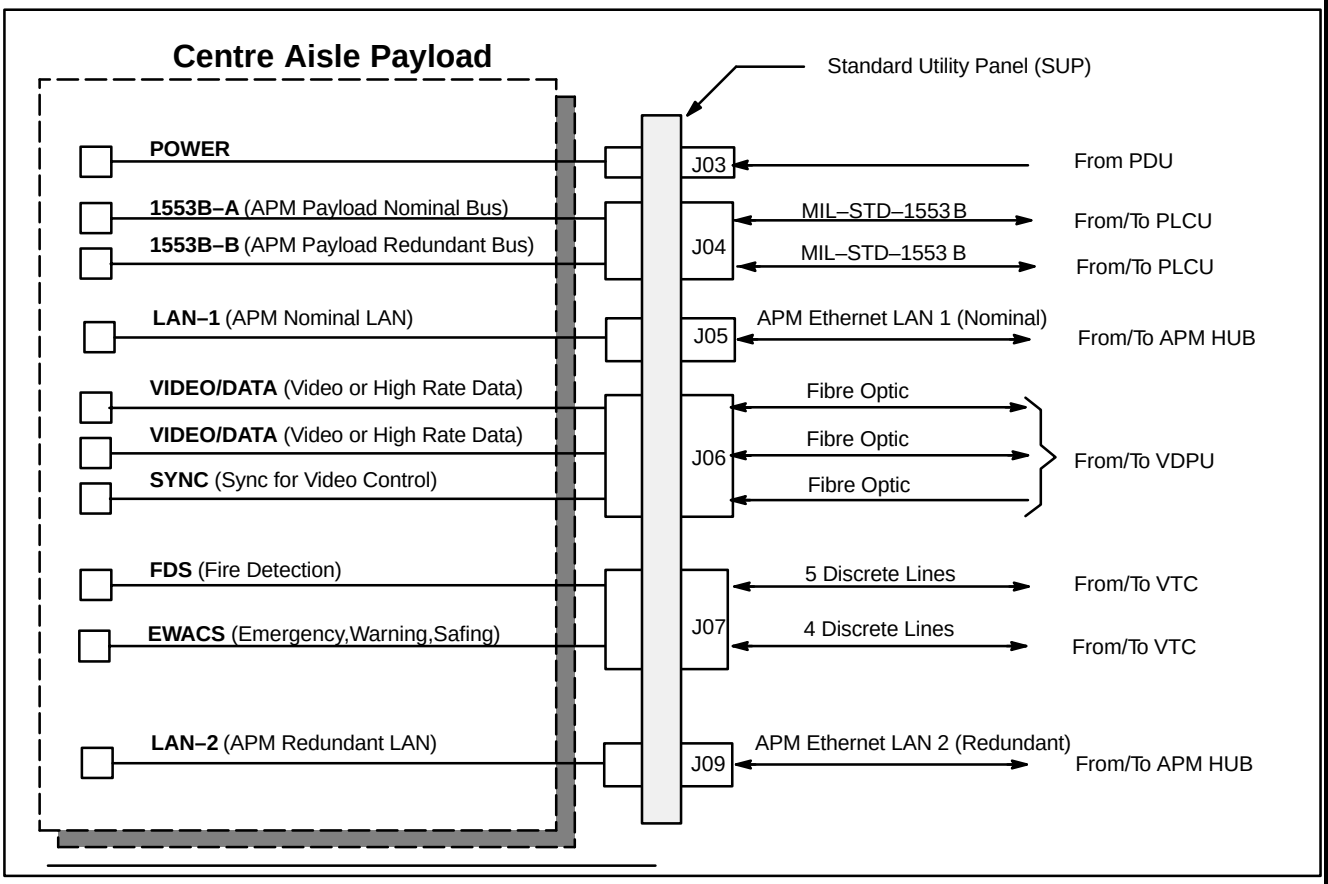

FIGURE 3.2.1–1 STANDARD UTILITY PANEL(SUP) 1 AND 4 INTERFACE

DaimlerChrysler Aerospace, Bremen – All Rights Reserved – Copyright per DIN 34

3.5 INTERNATIONAL SPACE STATION ENVIRONMENT

The natural environment is the environment as it exists unperturbed by the presence of the Space Station. The induced environment is the environment that exists as a result of the presence of the Space Station. Researchers should be aware of the potential effects the two environments can have on payloads.

3.5.1 NATURAL ENVIRONMENT

The natural environment includes:

- The Neutral Atmosphere
- Plasma
- Charged Particle Radiation
- Electromagnetic Radiation (EMR)
- Meteoroids
- Space Debris

The neutral atmosphere is significant for Space Station operations for two reasons. First, it produces torques and drag that degrade the Space Station altitude. Second, it affects the flux of trapped radiation the Station encounters.

Plasma is important to Space Station operations because it controls the extent of spacecraft charging, affects the propagation of electromagnetic waves such as radio frequency signals, and probably contributes to surface erosion. Another important effect is the production of electric fields in the structure as the Station moves across the geomagnetic field.

Many of the charged particles have sufficient energy to penetrate several centimetres of metal and to produce significant levels of ionized radiation inside. A high level of radiation can significantly affect materials, chemical processes and living organisms, especially the crew. It can also affect electronics by causing upsets, degrading performance or producing permanent damage. In addition, it can affect the propagation of light through optical materials by altering their optical properties.

The space station systems and payloads are bathed in electromagnetic radiation of all frequencies while in orbit. EMR comes from Earth, from plasmas surrounding Earth, from the Sun and the stars, and from the nearby ionosphere, disrupted by the passage of the Space Station itself. Intense EMR can affect the space station systems or payloads.

During its lifetime the Space Station will encounter both micrometeoroids and space debris. Because either type of object can damage the Station itself or its attached payloads, critical Station elements are protected by a combination of shielding and shadowing.

DaimlerChrysler Aerospace, Bremen – All Rights Reserved – Copyright per DIN 34

3.5.2 INDUCED ENVIRONMENT

The ISS provides an internal environment suitable for the performance of microgravity experiments. Acceleration levels of 10^{-4} g or less, at frequencies ≤ 0.1 Hz, are maintained during quiescent periods. However, the microgravity environment is affected by the operation of the Space Station. The use of control moment gyroscopes for attitude control during normal operations minimizes vibrational disturbances. During non-quiescent periods, payloads may be exposed to peak accelerations of 0.2 g, acting in any direction, e.g. during Shuttle docking and Station reboost.

A Microgravity Acceleration Measurement System (MAMS) is provided in the U.S. Laboratory Module. Information characterizing the acceleration environment is routinely available in a timely manner to researchers and crew to support payload operations and post–flight data analysis.

Quiescent and non–quiescent periods are scheduled in advance. During quiescent periods, which are maintained for at least 30 days, optimum microgravity conditions are provided. During non–quiescent periods, such as during Station reboost, the disturbed environment may be unacceptable for the operation of some payloads.

The presence, operation and motion of the Space Station will affect the surrounding external environment. Some of the known induced effects are:

- Plasma wake – the variation of plasma density from the ram to the wake side.
- Neutral wake – the variation of neutral density
- Plasma waves induced by the Station’s motion
- Vehicle glow on the ram or forward side
- Change of local plasma density and production of electrical noise caused by spacecraft charging
- Enhancement of neutral density and change of neutral composition by outgassing, offgassing, and the plumes from thrusters
- Emission of conducted and radiated electromagnetic power by systems on the Station
- Deliberate perturbation of the environment by active experiments and devices such as
  - Transmitters/ wave injectors
  - Particle beam emitters
  - Plasma emitters
  - Chemical releases
  - Laser beams
- Visible light generated by the Station and reflections from it
- Induced currents and voltage potential differences that are generated by the motion of the Station through Earth’s magnetic field, which can draw current through the surrounding plasma.

DaimlerChrysler Aerospace, Bremen – All Rights Reserved – Copyright per DIN 34

3.6 PAYLOAD GROUND AND SPACE OPERATIONS

Payload operations involves assembling a complement of research payloads for flight on the Space Station. The process begins with flight planning/ manifesting and includes analytical, physical and on–orbit payload integration and de–integration, safety, verification and training, as depicted in Figure 3.6–1, Payload Operations Process. In principle two payload categories are defined as shown in Figure 3.6–2, Categorization of Payloads.

- ”Class 1” payloads, which are characterized by their interfaces to the Space Station Segments. Normally these are payload facilities fully integrated at least within one ISPR, or payloads which are attached to the centre aisle, or a fully integrated facilities on an ExPA. Consequently the corresponding interface control has to be performed between APM and the affected Class 1 payload.
- ”Class 2” payloads have interfaces either to Class 1 payloads or even sometimes to other Class 2 payloads. This requires an interface control between the Class 1 and the Class 2 payload. A typical example would be an experiment facility drawer in an ISPR, or a single experiment facility on an ExPA.

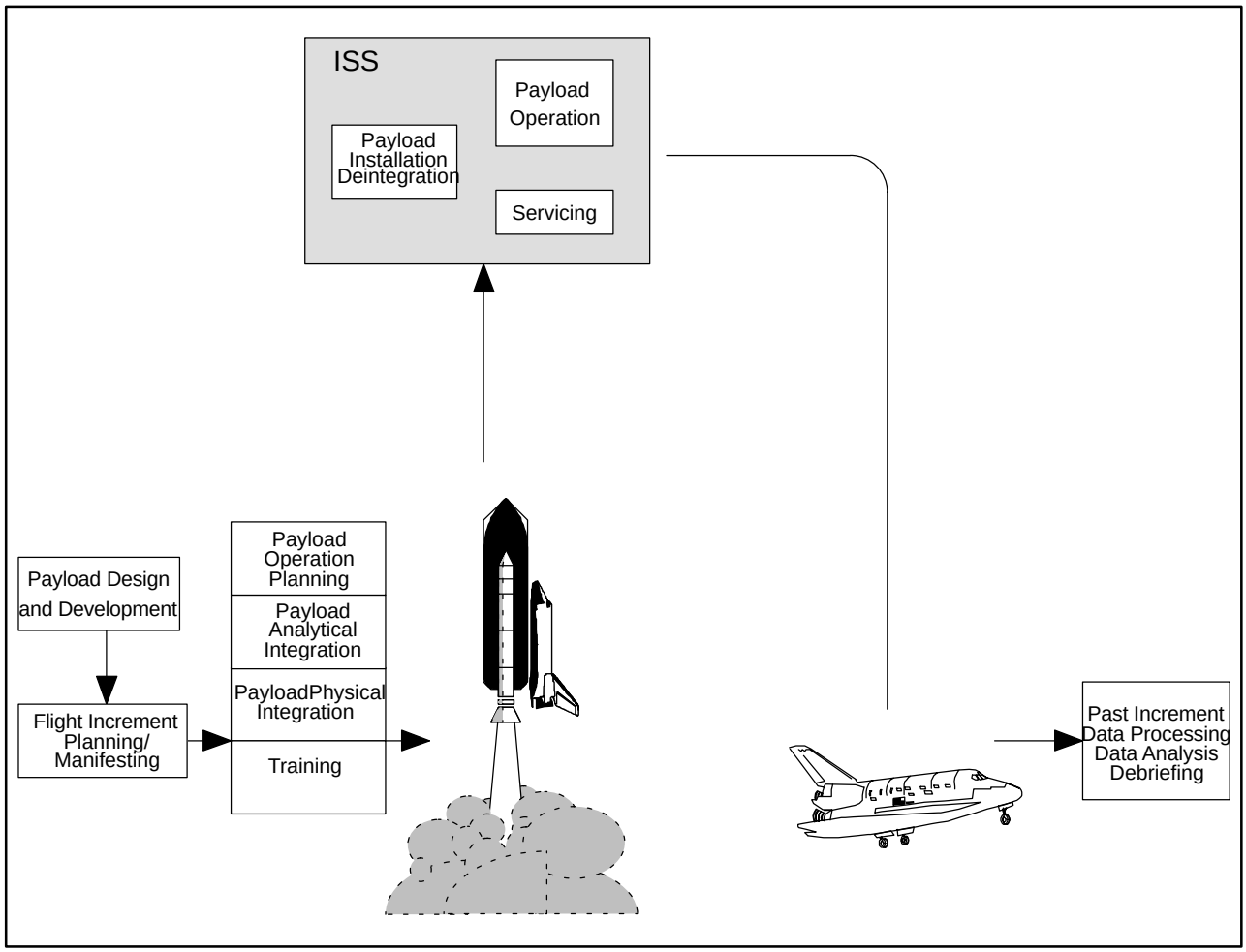

FIGURE 3.6–1 PAYLOAD OPERATIONS PROCESS

DaimlerChrysler Aerospace, Bremen – All Rights Reserved – Copyright per DIN 34

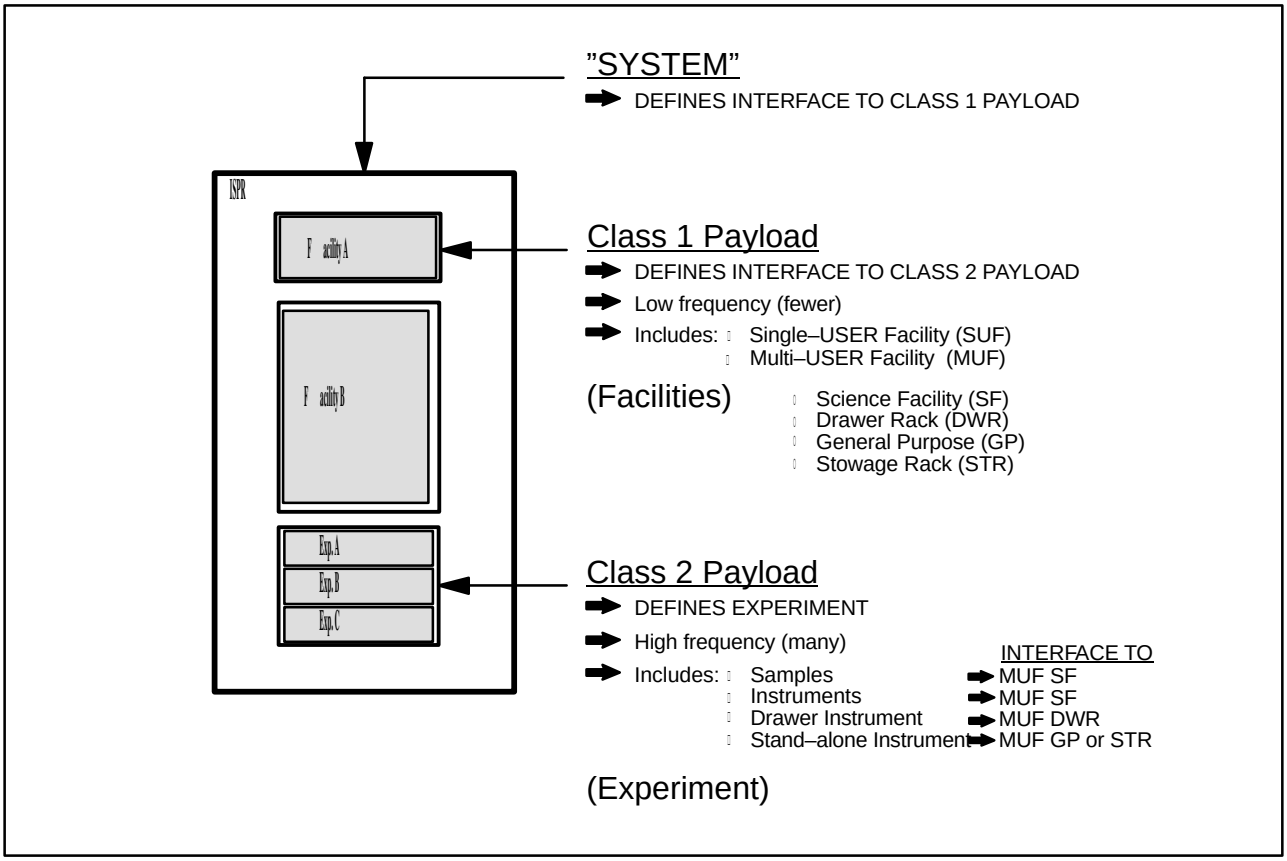

FIGURE 3.6–1 CATEGORIZATION OF PAYLOADS

The Payload Design and Development Process, showing the generic payload development flow for Class 1 and Class 2 payloads is explained in section 6.

In general, the payload development flow follows three phases which are:

- **Phase A** feasibility studies
- **Phase B** preliminary design (including sometimes breadboarding and qualification of critical hardware)
- **Phase C/D** design, development, manufacturing, testing, acceptance

3.6.1 GROUND OPERATIONS

Payload–to–rack integration for ESA payloads will typically occur at a European industrial facility. After this rack level processing, all integrated payload racks must then pass an Interface Verification Test (IVT) with the Rack Level Test Facility (RLTF). This test demonstrates the compatibility between the integrated payload rack and the simulated APM payload interfaces.

DaimlerChrysler Aerospace, Bremen – All Rights Reserved – Copyright per DIN 34

The APM launch payload complement will be fully integrated into the APM before launch with the NSTS. The interfaces of Class 1 and Class 2 payloads will be operated and verified during an integrated system test in the APM I&T facility. The integrated system APM plus payload will then be transported to KSC. Currently no further dedicated payload tests are planned at KSC prior to APM integration into the NSTS Shuttle Orbiter.

For the subsequent flights to the APM all ESA APM payloads (ISPRs, centre aisle payloads, or integrated payloads on an ExPA) will be transported to KSC for further integration into into the MPLM and/or Shuttle Middeck. Class 2 payloads may be integrated on other lauch carriers such as ATV.
Prior to the transportation to KSC the payload racks will be tested with the Rack Level Test Facility (RLTF).

3.6.2 FLIGHT OPERATIONS

The payload developer / researcher may receive data from the payload while it is operating on orbit to determine whether it is functioning as planned, or whether changes are necessary. While the payload is in orbit, the researcher monitors the payload science and housekeeping data, performs remote operations (payload commands), and oversees any actions taken by the crew with regard to the payload. The System (on board and on ground) is also responsible for monitoring the status of the payload to ensure that it remains in a safe operating mode.

3.6.3 DATA DISSEMINATION

For payload developer / researchers who require real time data from their payload, the on–board Data Management System (DMS) and the Communication system, downlink the payload data to the various International Partners Space Station/Space Station Element Control Centres. The payload science data will be routed via the Integrated Ground Subnetwork (IGS) to the researchers.
The researchers may receive data in real time during Acquisition–Of–Signal (AOS) periods , at prescheduled times, or upon the return of their payload, e.g. in case of biological samples.

The mode of data transmission is dependent upon the nature of the payload and the researcher’s data requirements. Some payloads may be on the Station for more than one increment. An increment is the period between two successive visits of the NSTS Shuttle (typically 90 days).

3.6.4 SAFETY

Crew and vehicle safety is a primary concern of the ISS design and operation. ESA is responsible for assuring that hazards are not created or propagated between APM payloads, or between any APM payload and any part of the Space Station, transport vehicles and supporting systems. The payload developer is expected to design and plan for operational use of the payload with the safety of the Space Station and crew as a major concern.

DaimlerChrysler Aerospace, Bremen – All Rights Reserved – Copyright per DIN 34

The implementation process for safety assurance for Space Station payloads is accomplished through a series of safety reviews. Individual payload safety certification reviews are closely associated with the payload's design and development milestones. During the reviews, the payload developer presents a brief description of the payload, its support equipment and its operation, followed by data unique to the particular review. The depth of reviews depends upon the complexity, technical maturity and hazard potential of the payload.

DaimlerChrysler Aerospace, Bremen – All Rights Reserved – Copyright per DIN 34

4 APM FLIGHT CONFIGURATION

As part of the Space Station, the APM represents an element of a multi–functional, orbital infrastructure which generates and/or distributes the resources required for scientific and technological research in Low Earth Orbit (LEO).

The APM provides the capability for:

- the long–term continuous exposure of payloads to the microgravity environment and the capability for the systematic repetition and evolution of experiments on a more frequent basis
- automatic, remotely controlled and interactive investigations involving orbit–based and ground–based crews composed of scientific, engineering and space operations personnel
- the remote reconfiguration of the APM (and potentially the payloads) functional–electrical configuration based on optimized operations and redundancy concepts
- a successive build–up and complementation of payloads based upon experiment results while using the logistics capabilities of the space transportation systems and the APM design features for Orbit Replaceable Units (ORU)
- in–orbit crew intervention for scientific preparatory, technical diagnostic, hardware configuration or recovery purposes when and as required.

Although aimed at basic research in the fields of material, fluid, biological, human and medical sciences, the APM versatility and resources provided makes it a suitable facility for other fields of applied sciences, process engineering and prototyping of automatic experiments.

The overview presented in Table 4–1 and 4–2, Summary of Orbital Infrastructure and APM Mayor Features, summarizes the major features of the APM and the associated orbital infrastructure. A summary of major APM payload resources is presented in Table 4–3, Summary of Overall APM Payload Resources.

DaimlerChrysler Aerospace, Bremen – All Rights Reserved – Copyright per DIN 34

TABLE 4–1 SUMMARY OF ORBITAL INFRASTRUCTURE AND APM MAJOR FEATURES.

Elements of Orbital Infrastructure	Functions
National Space Transportation System (NSTS) Ariane 5 (AR5)+ Automated Transfer Vehcle (ATV)	' Launch of APM; Launch/Return of MPLMs; Launch/Return of External Payloads ' Launch of pressurized Logistic modules
International Space Station	' Docking Ports for NSTS/MPLM, ATV Provision of Basic Resources
Space Station Manipulator	' Berthing of APM to Space Station ' External Payload Installation/Deinstallation
ISS Orbit/Flight Profile	' Orbit Inclination: 51.6 degrees, 53 days natural precession, 335 to 460 km altitude (181 to 248 nautical miles) ' Attitude: Earth orientation (z–axis towards earth)
Low Gravity Environment	' Levels of less than $0.707 \cdot 10^{-4} m \cdot sec^{-2}$ at quasi–static conditions (below 0.1 Hz of oscillation) during each TBD days calendar time interval ' Less than $0.707 \cdot 10^{-4} m \cdot sec^{-2}$ of oscillatory accelerations (RMS) between 0.1 and 1.0 Hz ' From $0.707 \cdot 10^{-4} m \cdot sec^{-2}$ to $7 \cdot 10^{-3} m \cdot sec^{-2}$ of oscillatory accelerations (RMS) between 1.0 Hz and 100.0 Hz ' Less than $7 \cdot 10^{-3} m \cdot sec^{-2}$ of oscillatory accelerations (RMS) above 100.0 Hz

DaimlerChrysler Aerospace, Bremen – All Rights Reserved – Copyright per DIN 34

TABLE 4–2 SUMMARY OF ORBITAL INFRASTRUCTURE AND APM MAJOR FEATURES (CONT.)

Elements of Orbital Infrastructure	Functions
Support to Automatic and Interactive Investigations	' All essential resources provided at each active rack location,standard utility panel (1&4), and external payload mechanism. ' End to end command and data exchange between payload on–board and scientists on ground ' Command inputs and return messages available to orbit and ground crews ' Dedicated payload data bus (MIL STD–1553B) and P/L Control Unit (PLCU) ' Dedicated payload video acquisition and processing (not for external payloads) ' Interface to on–board APM IEEE 802.3 LAN for data and command transmission ' Direct high rate link interfaces to individual payload racks, centre aisle, and external payloads ' Audio link to on–board crew
Remote Functional–Electrical APM Reconfiguration	' Failure tolerant resource provision networks, buses, lines switching ' Time lined automatic operation of experiments ' Payload data bus ' APM IEEE 802.3 LAN ' Automated/ground–supported failure detection, isolation, and recovery ' Pre–planned switching routines with fast reaction
Successive Build–Up and Complementation of Payloads	' ORU techniques and manual exchange applied on payload rack and subunit level
In–Orbit Crew Intervention Investigations	' Habitable conditions for the permanent/frequent presence of crew ' In–orbit crew interface to data management and command/control systems

DaimlerChrysler Aerospace, Bremen – All Rights Reserved – Copyright per DIN 34

TABLE 4–3 SUMMARY OF OVERALL APM PAYLOAD RESOURCES

Major APM Payload Resources	Resource Value
Total power distributed to payloads	13.5 kW maximum continuous
Total payload heat load collected	14.5 kW maximum continuous
Maximum payload data bit streams (applicable for the total payload complement including ISPRs, centre aisle payloads, and external payloads)	' max. 32 Mbps of video and/or high rate data via fibre optics (for external payloads electrical interface and no video ' max. 1.55 Mbps of data and command transmission via APM IEEE 802.3 LAN ' max. 90 Kbps of data and command transmission on payload MIL–STD–1553B bus
Time signal distribution	On payload MIL–STD–1553 B bus
Audio communication	Full duplex, 2 channels
Total number of rack positions	' 10 active ISPR locations ' 3 storage rack locations
Total number of centre aisle positions	' 2 active centre aisle connection capabilities
Total number of ExPA positions	' 4 active ExPA locations, each with up to two Remote Terminals
Total payload mass	' Launch: 2,500 kg for initial payload ' On–orbit: 9,000 kg
Payload vacuum and venting facility	' 1.3 x 10^{-3} mbar pre–vacuum in venting system ' 1.3 x 10^{-3} mbar continuous vacuum in vacuum system
Moderate Temperature Water Loop	' between 30 kg/h and 190 kg/h
Total number of nitrogen interfaces	' 10 active ISPR locations

DaimlerChrysler Aerospace, Bremen – All Rights Reserved – Copyright per DIN 34

4.1 APM LAYOUT DESCRIPTION AND AREA IDENTIFICATION

4.1.1 APM COORDINATE SYSTEM

The APM reference coordinate system is shown in Figure 4.1.1–1, APM Reference Coordinate System.

The APM coordinate system in relation to the International Space Station coordinate system is shown in Figure 4.1.1–2, APM Coordinate System and ISS Coordinate System Relation.

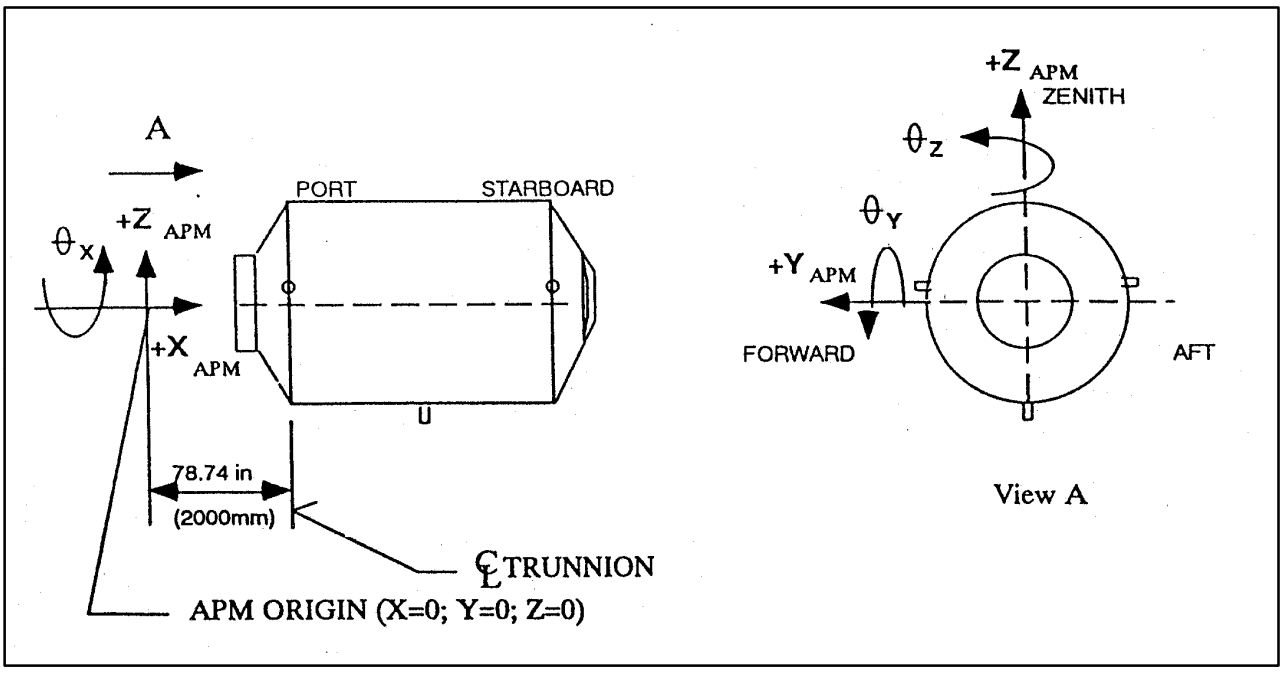

FIGURE 4.1.1–1 APM REFERENCE COORDINATE SYSTEM

DaimlerChrysler Aerospace, Bremen – All Rights Reserved – Copyright per DIN 34

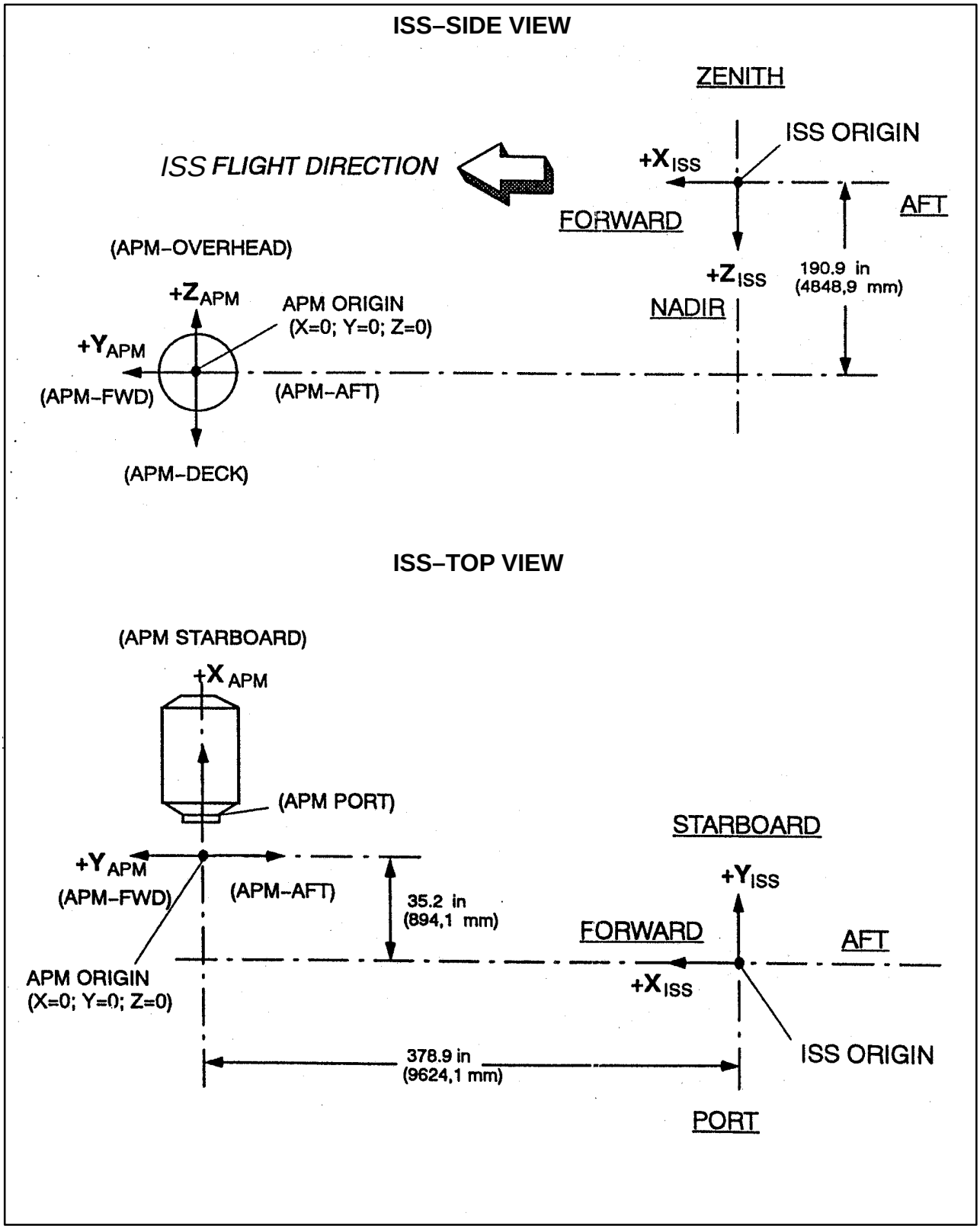

FIGURE 4.1.1–2 APM COORDINATE SYSTEM AND ISS COORDINATE SYSTEM RELATION

DaimlerChrysler Aerospace, Bremen – All Rights Reserved – Copyright per DIN 34

4.1.2 INTERNAL LAYOUT AND PAYLOAD ACCOMMODATION

The APM internal layout is shown in Figure 4.1.2–1, APM Internal Configuration and Cross Section. The APM consists of a cylinder with an inner diameter of 4216 mm and an overall length of 6137.2 mm, closed by a truncated end cone at each end. The cross–section is double symmetric with four identical stand–off envelopes accommodating the routing of utility lines and four identical rack envelopes spaced 90 degrees apart.

An essential APM design feature facilitates:

- the inspection of either the module shell or the stand–off areas
- access to the rear and the sides of the racks

by hinging/tilting the racks, i.e. ISPRs and deck racks.

The stand–off areas facing the crew cabin contain the following:

- Diffusers located on the upper stand–offs on both sides of the APM to diffuse the cabin air. The APM cabin air is returned via a inlet grid to the Intermodule Ventilation Fan.
- In addition, on both sides of the APM cabin at the upper stand–offs, lamps are installed to provide cabin illumination.

The stand–off areas at the bottom of each payload rack contain the Utility Interface Panels (UIP), which carry all utility connectors for the rack and which provides the utility interface to the payload. The layout of the APM to ISPR utility interface is shown in Figure 4.1.2–2, APM to ISPR Utility Interface Layout. The pig–tails from the ISPR to the UIP are payload provided items.

DaimlerChrysler Aerospace, Bremen – All Rights Reserved – Copyright per DIN 34

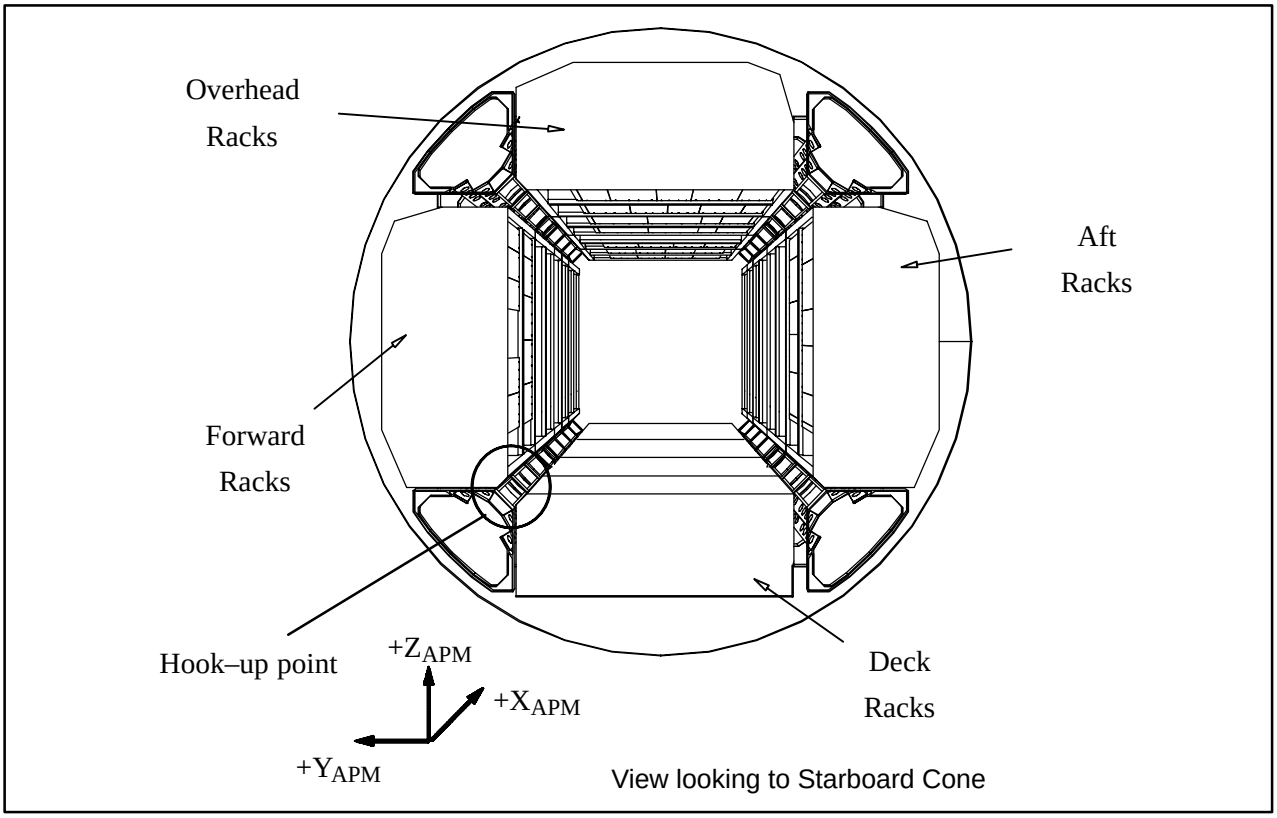

FIGURE 4.1.2–1 APM INTERNAL CONFIGURATION AND CROSS–SECTION

DaimlerChrysler Aerospace, Bremen – All Rights Reserved – Copyright per DIN 34

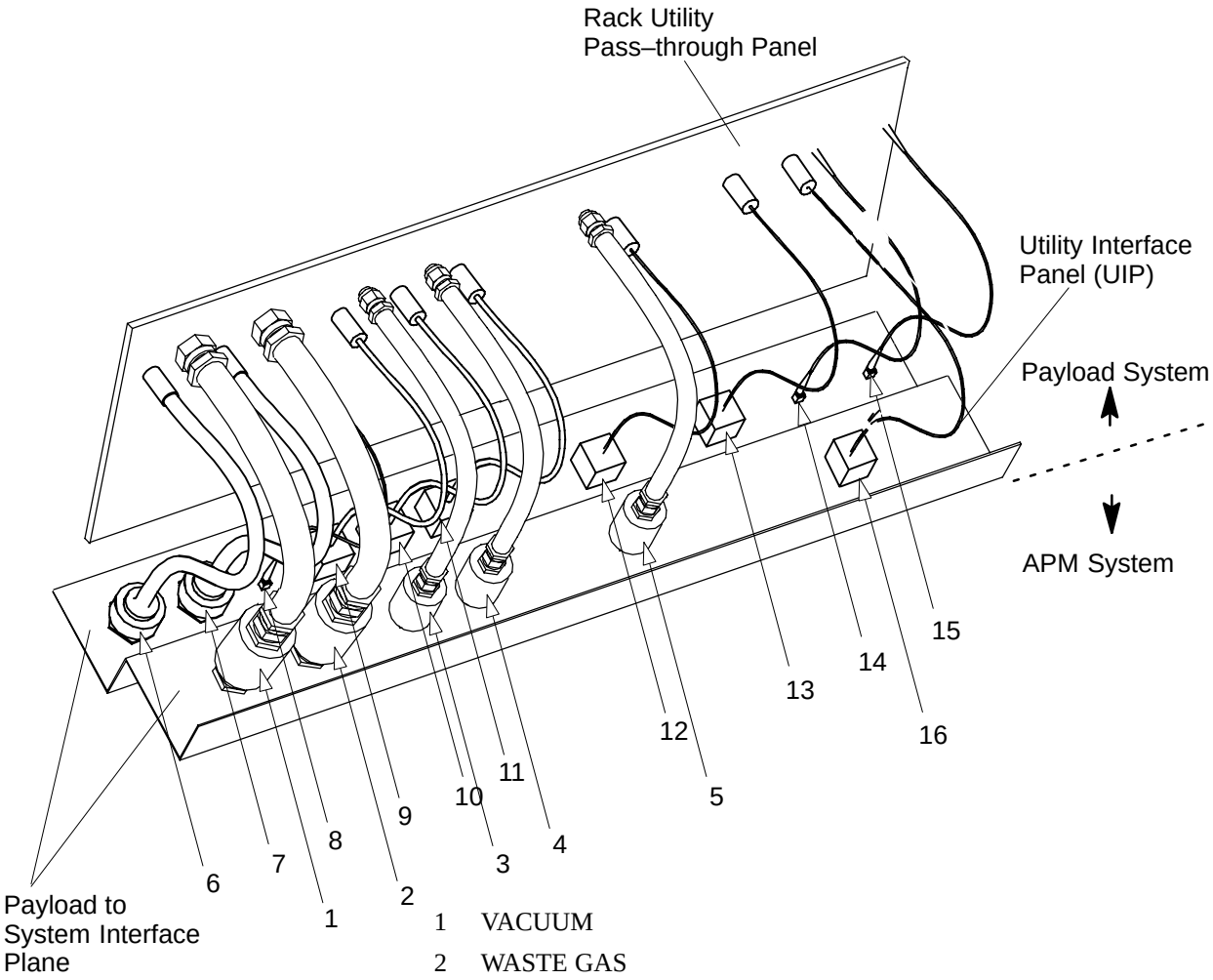

1 VACUUM
2 WASTE GAS
3 TCS MOD SUPPLY
4 TCS MOD RETURN
5 GN_2
6 ESSENTIAL/AUXILIARY POWER [J2]
7 MAIN POWER [J1]
8 VIDEO/SYNC (Fibre Optic) [J16]
9 HRD (Fibre Optic to APS) [J7]
10 FDS/MAINT (Fire Detection/ Power Maintenance Switch) [J43]
11 1553B–A (Nominal MIL–STD–1553–B Bus) [J3]
12 1553B–B (Redundant MIL–STD–1553–B Bus) [J4]
13 EWACS (Payload emergency, warning, safing) [J45]
14 LAN–2 (APM IEEE 802.3 Redundant LAN) [J47]
15 LAN–1 (APM IEEE 802.3 Nominal LAN) [J46]
16 Video FO (only at ISPR location A4) [J48]

FIGURE 4.1.2–2 APM TO ISPR UTILITY INTERFACE LAYOUT

DaimlerChrysler Aerospace, Bremen – All Rights Reserved – Copyright per DIN 34

The centre aisle has a width of 2133.6 mm and a height of 2133.6 mm. Its vertical reference is represented by the deck panel covers. The panels of the deck racks separate the crew cabin from the underfloor area and permits accessibility to the underfloor.

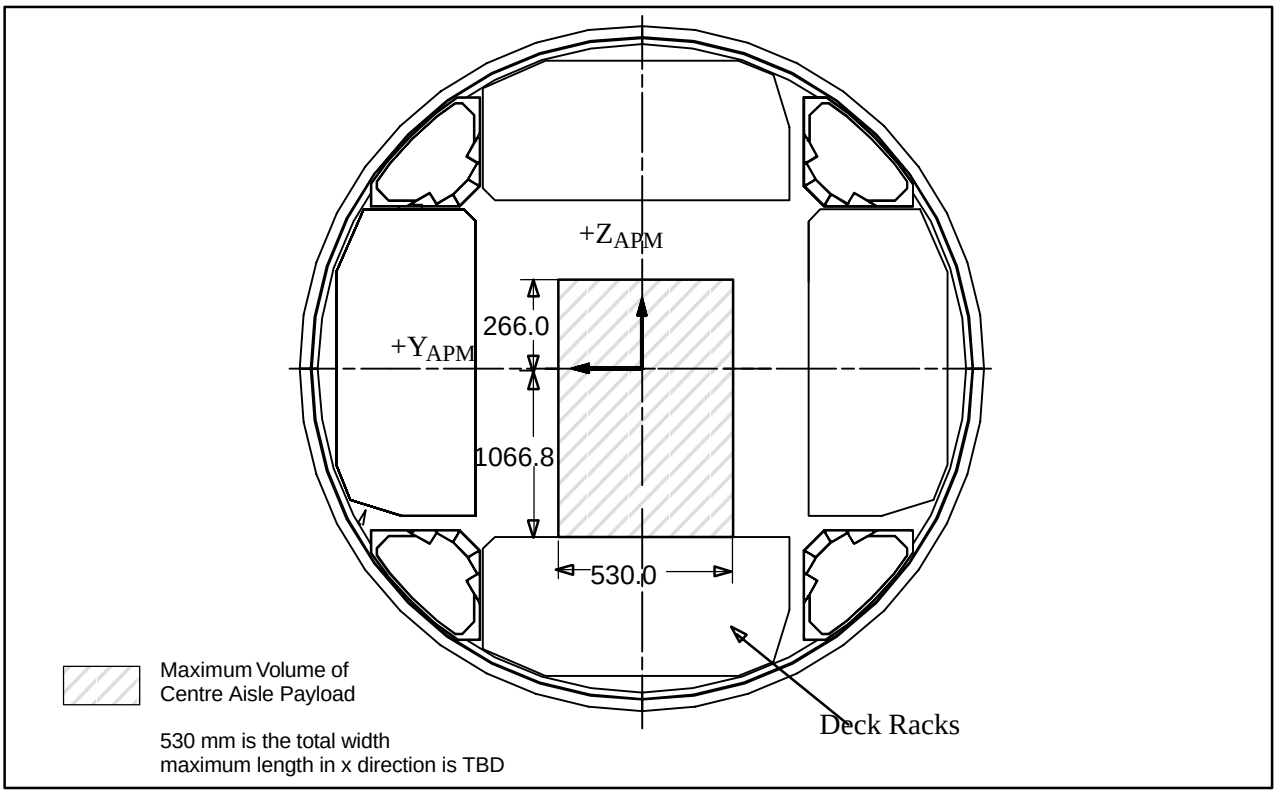

FIGURE 4.1.2–3 CENTRE AISLE VOLUME PROVISIONS FOR PAYLOAD

The centre aisle has a width of 2133.6 mm and a height of 2133.6 mm. Its vertical reference is represented by the deck panel covers. The panels of the deck racks separate the crew cabin from the underfloor area and permits accessibility to the underfloor. Seat tracks attached to the deck rack posts provide the possibility to mount payload equipment within the centre aisle. The centre aisle volume where permanent and non permanent payload may be accommodated is shown in Figure 4.1.2 –3, Centre Aisle Volume Provisions for Payload.

Payload equipment can be attached on orbit to the deck rack seat tracks as shown in figure 4.1.2–4, Centre Aisle Payload Clearance Envelope. Seat tracks are also at the ISPR front post for temporary attachment of payload equipment. The seat track interface for the deck racks and ISPRs is shown in figure 4.1.2–5, Seat Track Interface.

DaimlerChrysler Aerospace, Bremen – All Rights Reserved – Copyright per DIN 34

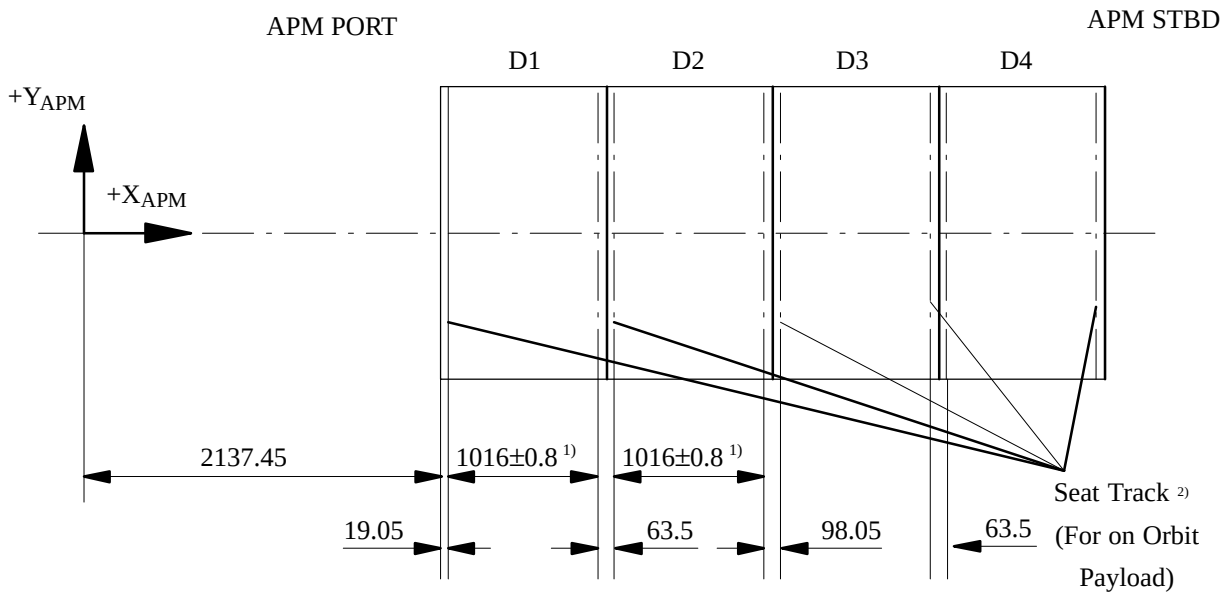

NOTE: Centre line to Centre line.

FIGURE 4.1.2–4 CENTRE AISLE PAYLOAD CLEARANCE ENVELOPE

DaimlerChrysler Aerospace, Bremen – All Rights Reserved – Copyright per DIN 34

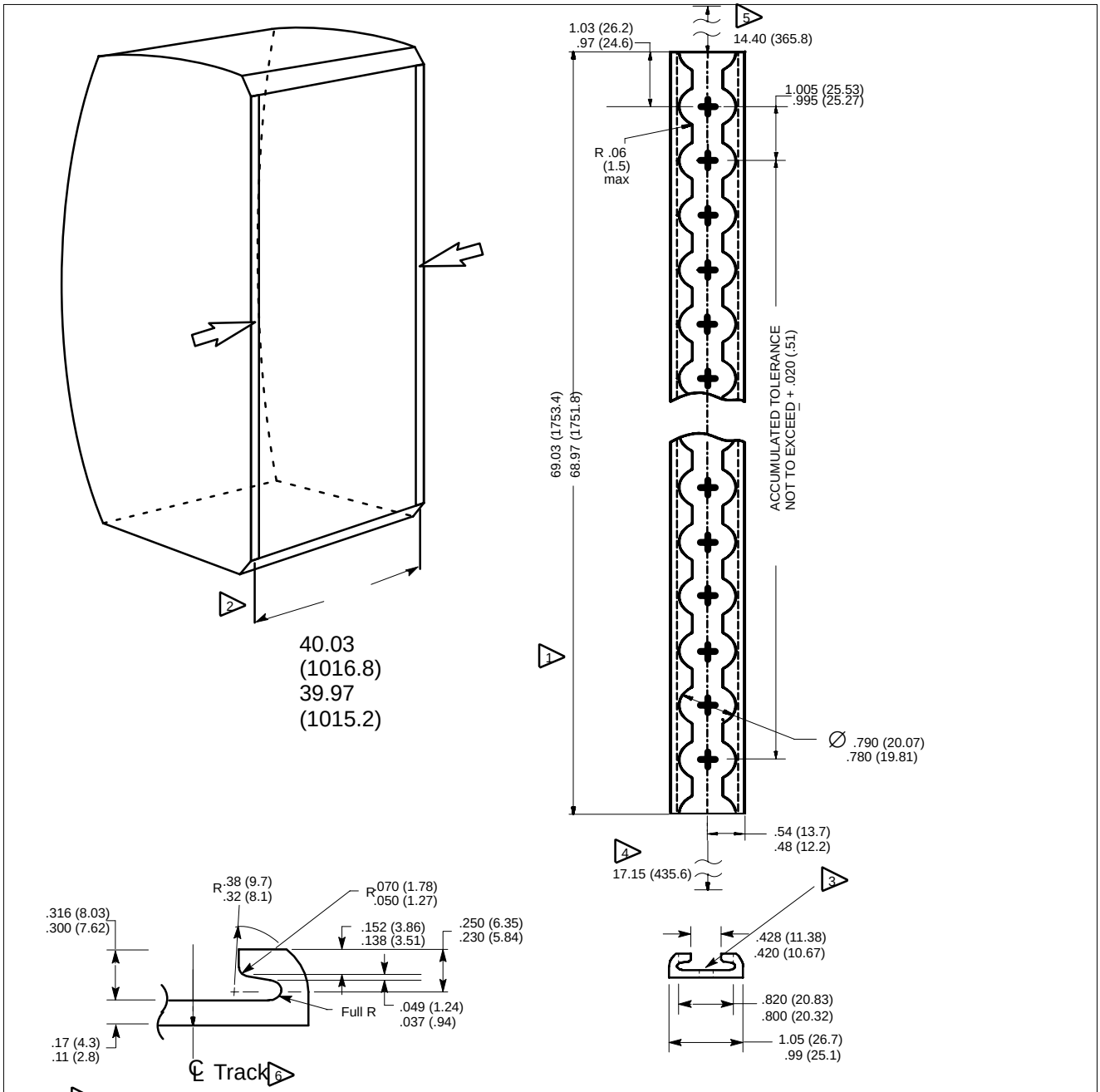

1. Typical for 80” rack. Length is dependent on rack size and available space. Minimum length of 40.54 (1029.7).
2. Centre line to centre line of tracks
3. Fastener will not protrude above the bottom of the seat track.
4. Maximum distance from GSE points E and F.
5. Maximum distance from GSE points G and H.
6. Front Face of Seat Track is within static envelope.

FIGURE 4.1.2–1 SEAT TRACK INTERFACE

DaimlerChrysler Aerospace, Bremen – All Rights Reserved – Copyright per DIN 34

Nearly all the APM Subsystems such as EPDS, ECLS, DMS and the connecting harness are located inside the two cones and in dedicated rack– type structures. These racks in the subfloor areas are called deck racks. The fourth deck rack location is assigned for a stowage rack. The cone located equipment is attached to panels to allow access for maintenance and inspection.

As shown in Figure 4.1.2–4, Port Cone Internal Layout, the Port Cone accommodates the hatch assembly, the power and water lines to the bulkhead feedthroughs for further routing to the SSMB. One Video Camera Assembly (VCA), an Audio Antenna, a Portable Fire Extinguisher (PFEX) and one Master Alarm Light (MAL) panel are also installed.

The Starboard Cone as shown in Figure 4.1.2–5, Starboard Cone Internal Layout, accommodates the majority of the avionics and data management equipment on support panels. These panels house four DMS computers (DMC, MMC, PLCU, Spare) as well as two Mass Memory Units.

Furthermore the Video/Data Processing Unit (VDPU), Video Cassette Recorder (VCR) and the High Rate Multiplexer (HRM) are located in the Starboard Cone volume. These assemblies and units provide the high data rate/ video communication capabilities of the APM system.

In addition the Starboard Cone in its lower section accommodates a vacuum valve which provides the interface of the APM payload vacuum system to open space.

For the Fire Detection and Suppression (FDS) functions, the APM internal volume is divided into multiple zones. Each ISPR constitutes a zone. In addition there is a cabin zone and further zones in the deck rack and cones.

DaimlerChrysler Aerospace, Bremen – All Rights Reserved – Copyright per DIN 34

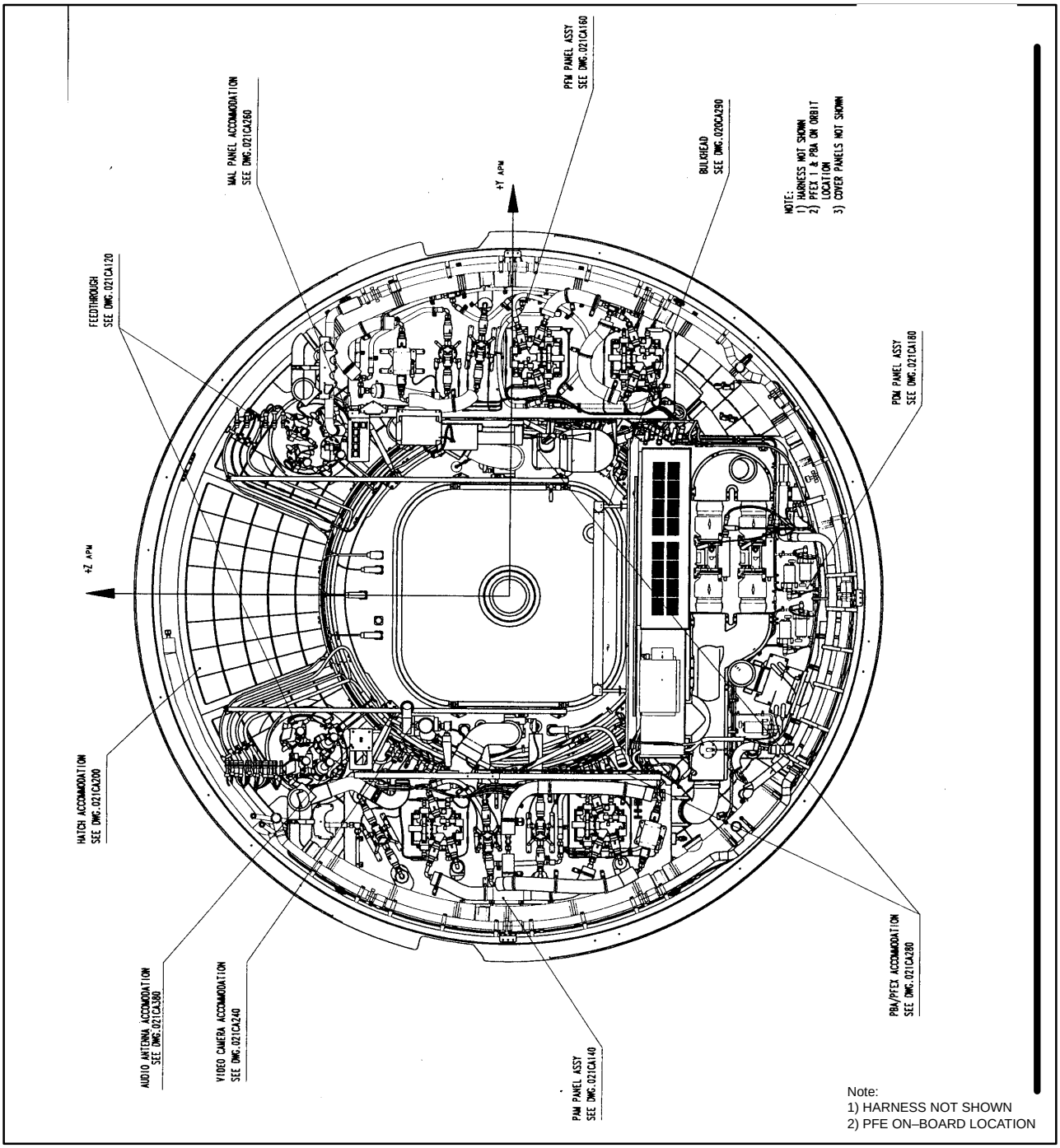

Note:
1) HARNESS NOT SHOWN
2) PFE ON–BOARD LOCATION

FIGURE 4.1.2–4 PORT CONE INTERNAL LAYOUT (VIEW FROM MODULE INSIDE)

DaimlerChrysler Aerospace, Bremen – All Rights Reserved – Copyright per DIN 34

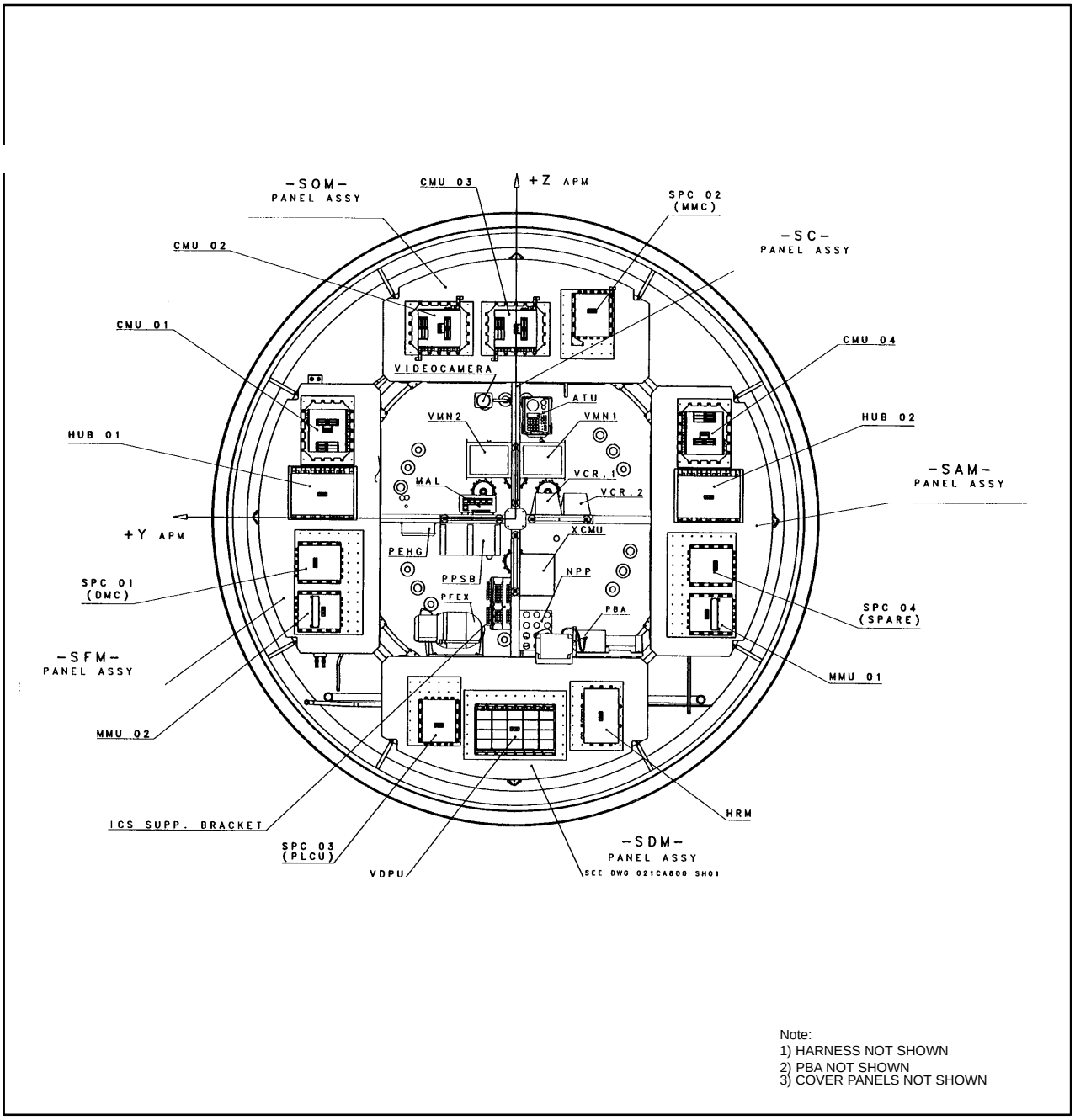

Note:
1) HARNESS NOT SHOWN
2) PBA NOT SHOWN
3) COVER PANELS NOT SHOWN

FIGURE 4.1.2–5 STARBOARD CONE INTERNAL LAYOUT

DaimlerChrysler Aerospace, Bremen – All Rights Reserved – Copyright per DIN 34

4.1.3 APM EXTERNAL LAYOUT

The APM external layout is shown in Figure 4.1.3–1, APM External Layout. It consists of the

- Cylindrical shell
- End cones
- Shuttle Orbiter Trunnions
- Powered Data Grapple Fixture (PDGF)
- Common Berthing Mechanism (CBM) passive half
- Micrometeoroid and Debris Protection Shield and Multilayer Insulation
- Feedthroughs for Power, Data and fluid lines
- Feedthroughs for pressure release and vacuum/ venting devices
- External Payload Facility

The Port cone external layout is shown in Figure 4.1.3–2, Port Cone External Layout. A set of feedthrough plates and panels is dedicated to the routing of utilities and for the accommodation of a vent dumping device to open space. The vent dumping device interfaces with the APM internal ventline system.

The Starboard cone external layout is shown in Figure 4.1.3–3, Starboard Cone External Layout. Again a feedthrough plate accommodates the vacuum dumping device.

The four accommodation locations for external payloads attached to an ExPA are shown in figure 4.1.3–1. Four External Payload Mechanisms (ExPMs) are attached to the APM Starboard Cone, two in APM x direction, one in APM z direction, and one in APM –z direction.

DaimlerChrysler Aerospace, Bremen – All Rights Reserved – Copyright per DIN 34

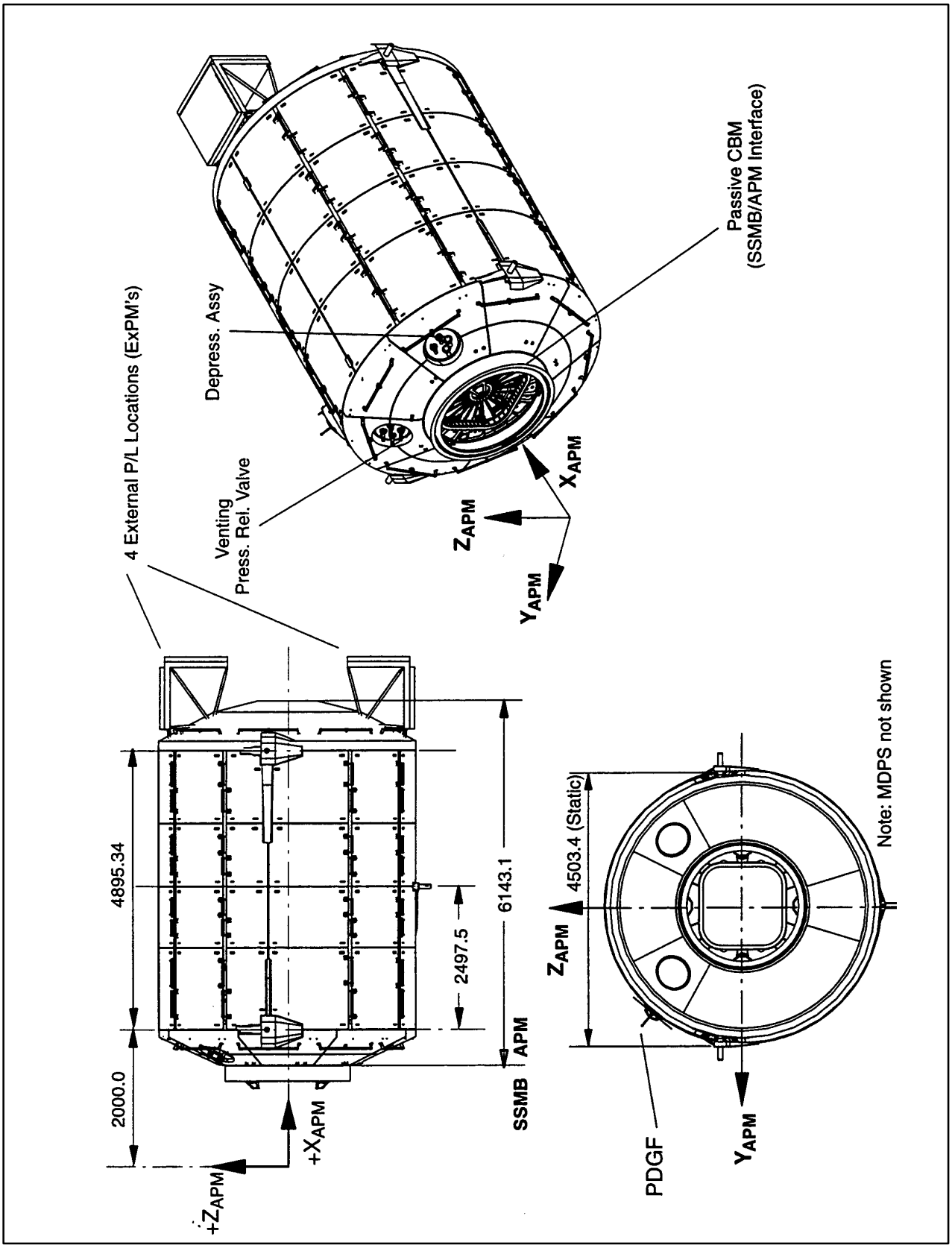

FIGURE 4.1.3–1 APM EXTERNAL LAYOUT

DaimlerChrysler Aerospace, Bremen – All Rights Reserved – Copyright per DIN 34

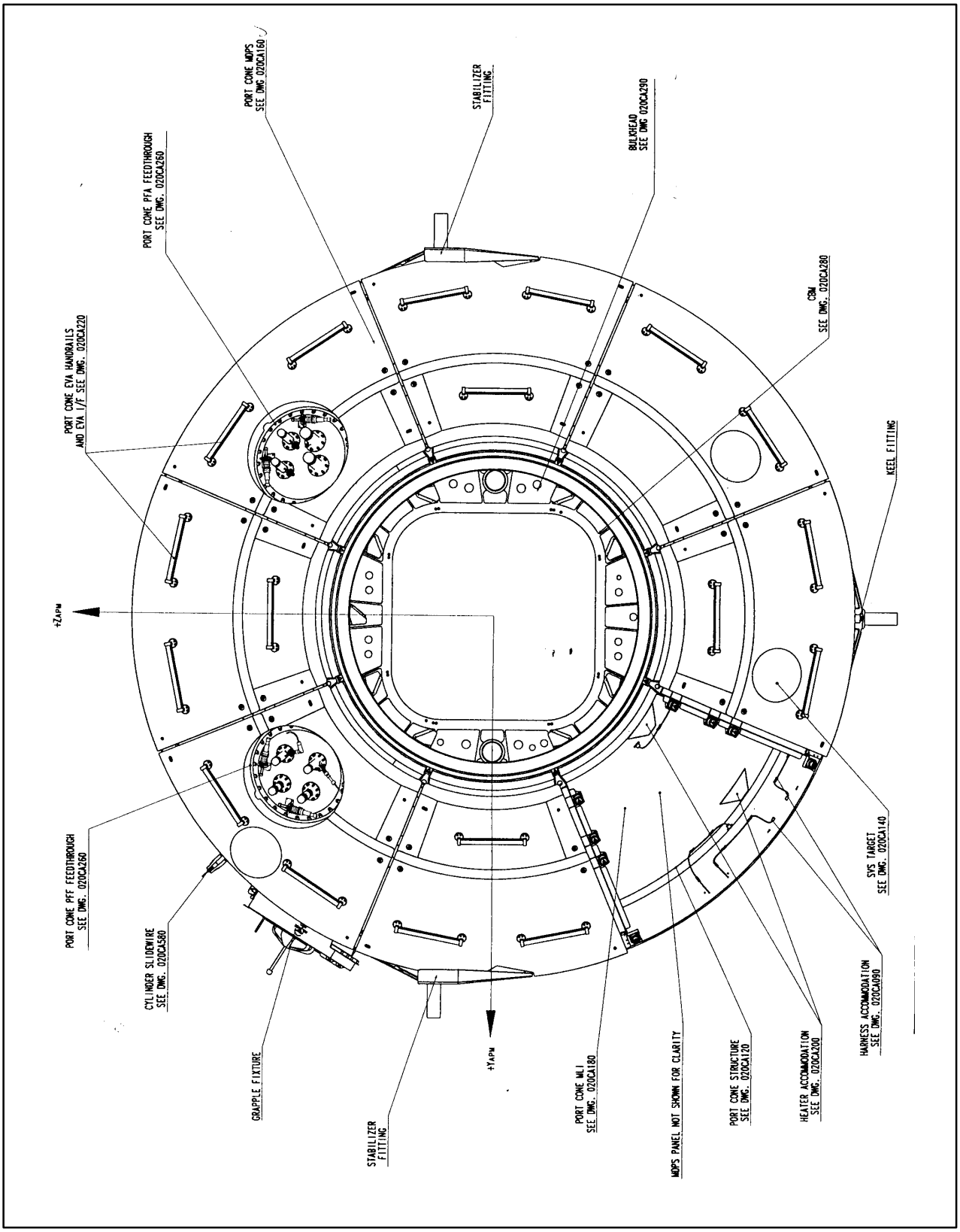

FIGURE 4.1.3–2 PORT CONE EXTERNAL LAYOUT

DaimlerChrysler Aerospace, Bremen – All Rights Reserved – Copyright per DIN 34

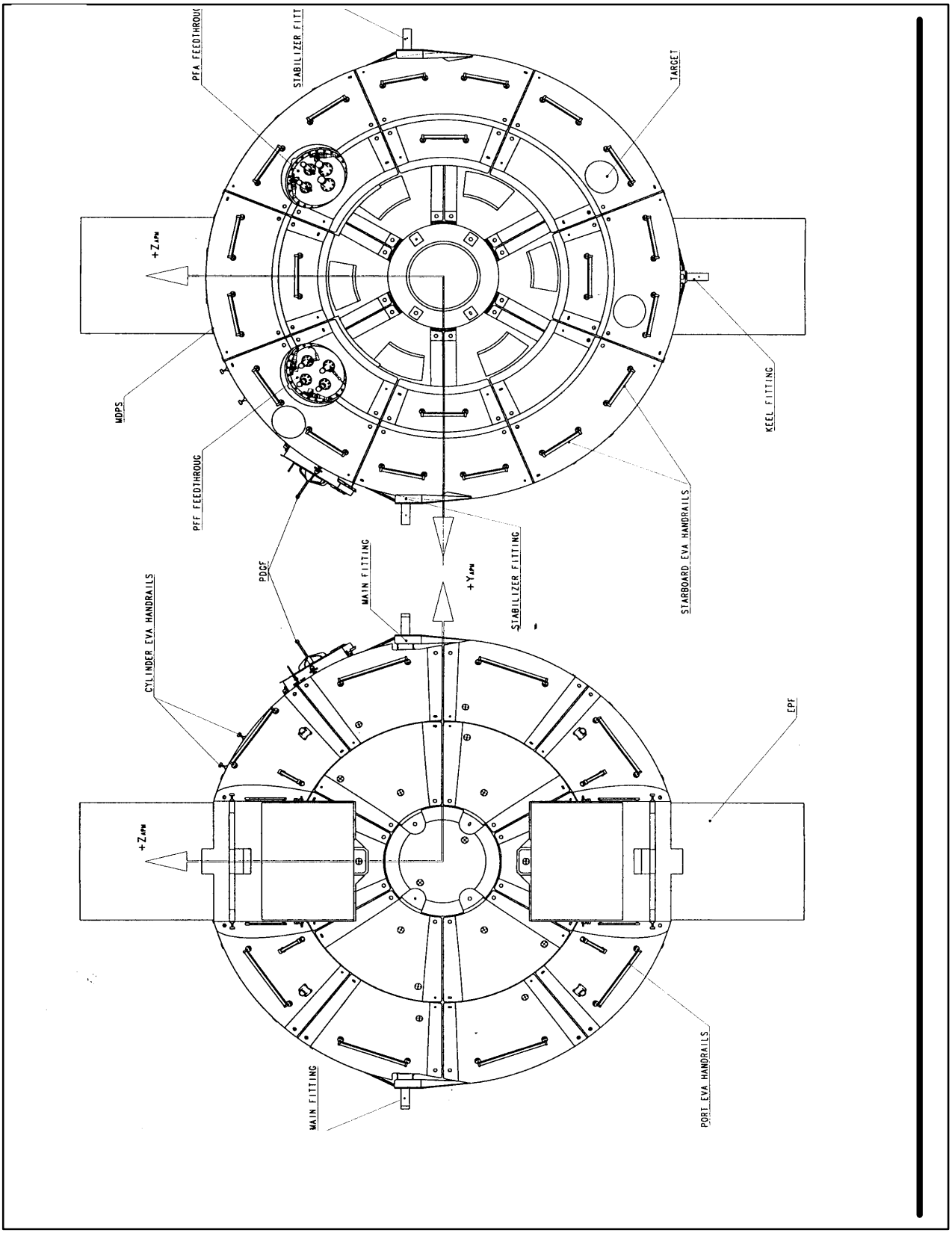

FIGURE 4.1.3–3 STARBOARD AND PORT CONE EXTERNAL LAYOUT

DaimlerChrysler Aerospace, Bremen – All Rights Reserved – Copyright per DIN 34

4.1.3.1 EXTERNAL PAYLOAD ACCOMMODATION AND INTERFACES

External payload mounting provision consist of External Payload Adapters (ExPAs). ESA will provide ExPAs to the payload developers. The mechanical interfaces between the ExPA and the payload are shown in figure 4.1.3.1–1, Payload Mounting Provisions on ExPA.
Figure 4.1.3.1–2, ExPA Attach Point Details, shows the payload to ExPA attach point details.

TBD

FIGURE 4.1.3.1–1 PAYLOAD MOUNTING PROVISIONS ON EXPA

TBD

FIGURE 4.1.3.1–2 EXPA ATTACH POINT DETAILS

DaimlerChrysler Aerospace, Bremen – All Rights Reserved – Copyright per DIN 34

Details of the electrical and data connector panels on the ExPA are shown in figure 4.1.3.1–3, ExPA Electrical Connector Interface, and 4.1.3.1–4 ExPA Data Connector Interface.

TBD

FIGURE 4.1.3.1–3 EXPA ELECTRICAL CONNECTOR INTERFACE

TBD

FIGURE 4.1.3.1–4 EXPA DATA CONNECTOR INTERFACE

DaimlerChrysler Aerospace, Bremen – All Rights Reserved – Copyright per DIN 34

4.2 PAYLOAD ACCOMMODATION PROVISIONS

4.2.1 PAYLOAD RACK

Pressurized payloads are primarily accommodated in racks. Figure 3.1.7–1 summarizes the available and occupied rack positions of the APM. Ten racks are reserved for payload accommodation, three rack positions are occupied by system equipment and three by passive stowage racks. Each payload rack location is compatible for either

- the ISPR, connected to the standard utility interface panel as per Figure 4.1.2–3, or for
- the use of primary rack attachments for racks other than ISPRs connected to the standard utility outlets.

The passive stowage rack locations provide standard ISPR primary attachments but have no utility interfaces.

The APM payload racks can be regarded as self–standing entities in several respects, amongst which

- the rack represents the largest individual entity which can be transported to/from orbit as a logistics up/download, which can be moved within the Space Station between APM and MPLM, and which can be installed on orbit in the APM
- each rack is individually and exclusively connected to its own utility outlets
- each payload rack volume is enclosed and furnished with its own fire detection system (= individual zone for fire detection)

The basic rack design consists of the rack structure, the rack mechanical attachment devices, the closure panels and the hinging mechanism. Mission specific items are the middle frame, rack–mounted ORU mechanical attachments, payload specific support structures, utility interfaces and support hardware.

The rack design allows the insertion, removal or exchange of individual payload equipment on orbit. Figure 4.2–1, Typical Intergrated ISPR, illustrates a completely integrated payload ISPR.

DaimlerChrysler Aerospace, Bremen – All Rights Reserved – Copyright per DIN 34

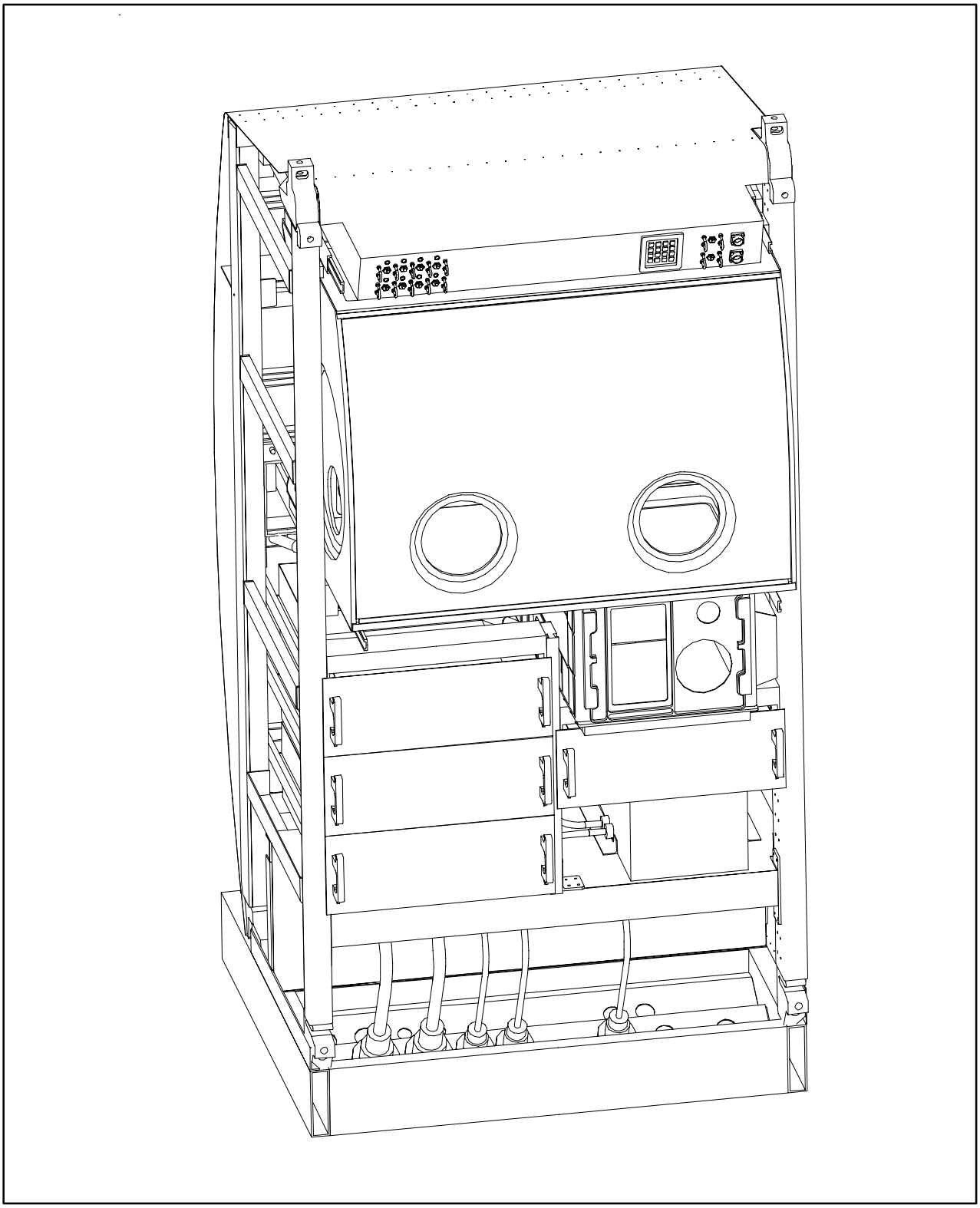

FIGURE 4.2–1 TYPICAL INTEGRATED ISPR

DaimlerChrysler Aerospace, Bremen – All Rights Reserved – Copyright per DIN 34

4.2.1.1 UTILITY ZONES

Payload racks can be used as active or storage racks. The active racks are subdivided into

- medium power racks (6.0 kW)
- low power racks (3.0 kW)

which correspond to the ISPR Location Utility Interface characteristics of Table 3.2–1.

Racks of the same type are interchangeable between the assigned locations. But nevertheless an APM DMS reconfiguration is required in any case. Other racks cannot properly be operated in certain locations (e.g. high power rack in a low power rack location).

4.2.1.2 PAYLOAD RACK TILTING

In orbit each rack can be tilted up to 80 ° from the wall into the aisle from a pivot point located at the bottom of the rack, which attaches to the stand–off structure. This feature provides access to the pressure shell inner surface and also to the rack for maintenance, as shown in Figure 4.2.1.2–1, Wall Inspection and Rack Manipulation Principles employing Hingeable Racks.

The hinge points are designed as on–orbit load retention points and can also release or initially fix the rack, depending on the operations required.

The front sides are accessible from the crew cabin without moving the racks. This facilitates

- the use of drawers enabling quick access to their interior (illustrated in Figure 4.2.1.2–2, Rack Front Access and Use of Equipment Drawer.)
- the installation and removal of payload subunits when appropriate design principles are applied
- the operation, surveillance, and supply of payloads.

DaimlerChrysler Aerospace, Bremen – All Rights Reserved – Copyright per DIN 34

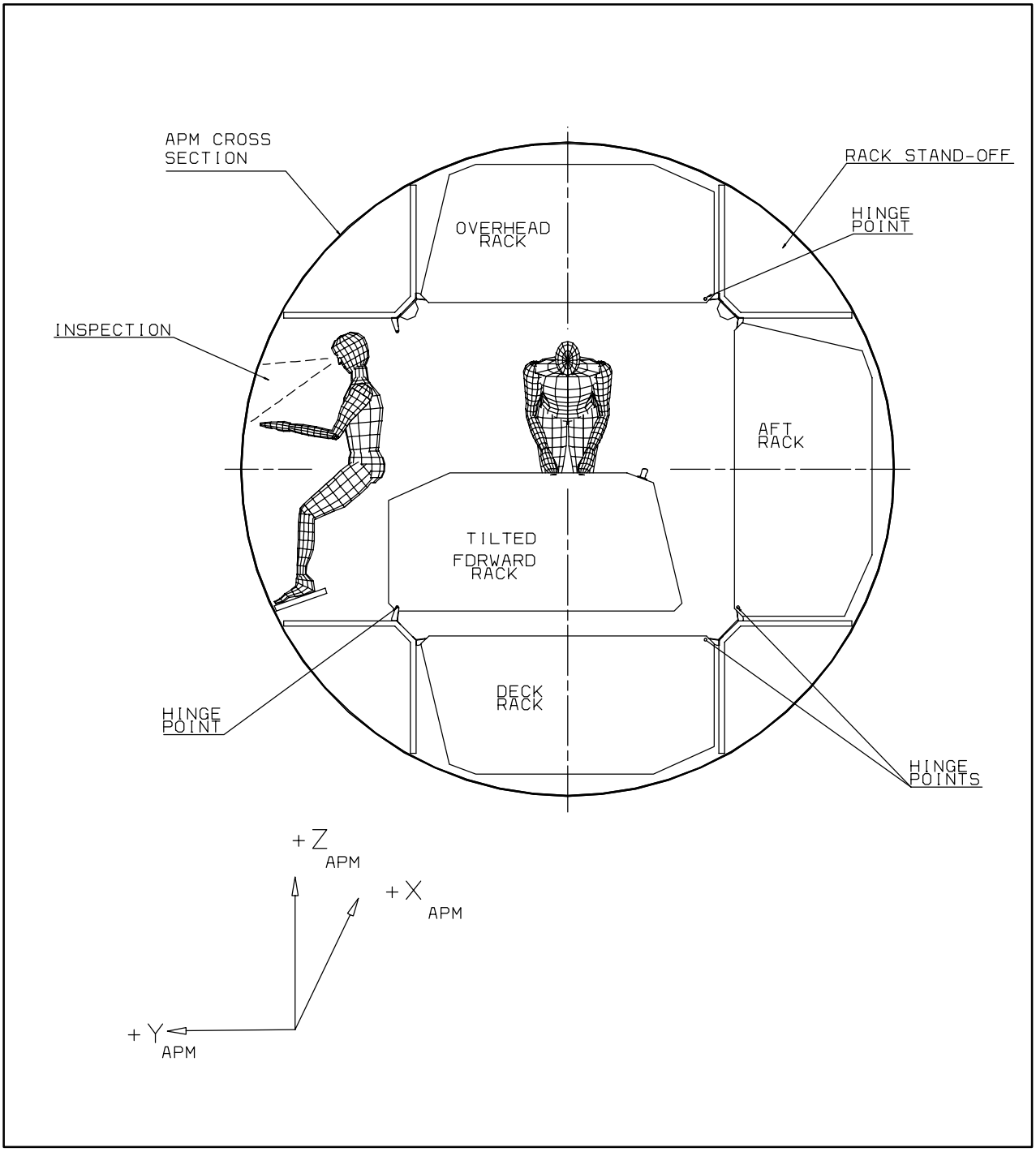

FIGURE 4.2.1.2–1 WALL INSPECTION AND RACK MANIPULATION PRINCIPLES EMPLOYING HINGEABLE RACKS

DaimlerChrysler Aerospace, Bremen – All Rights Reserved – Copyright per DIN 34

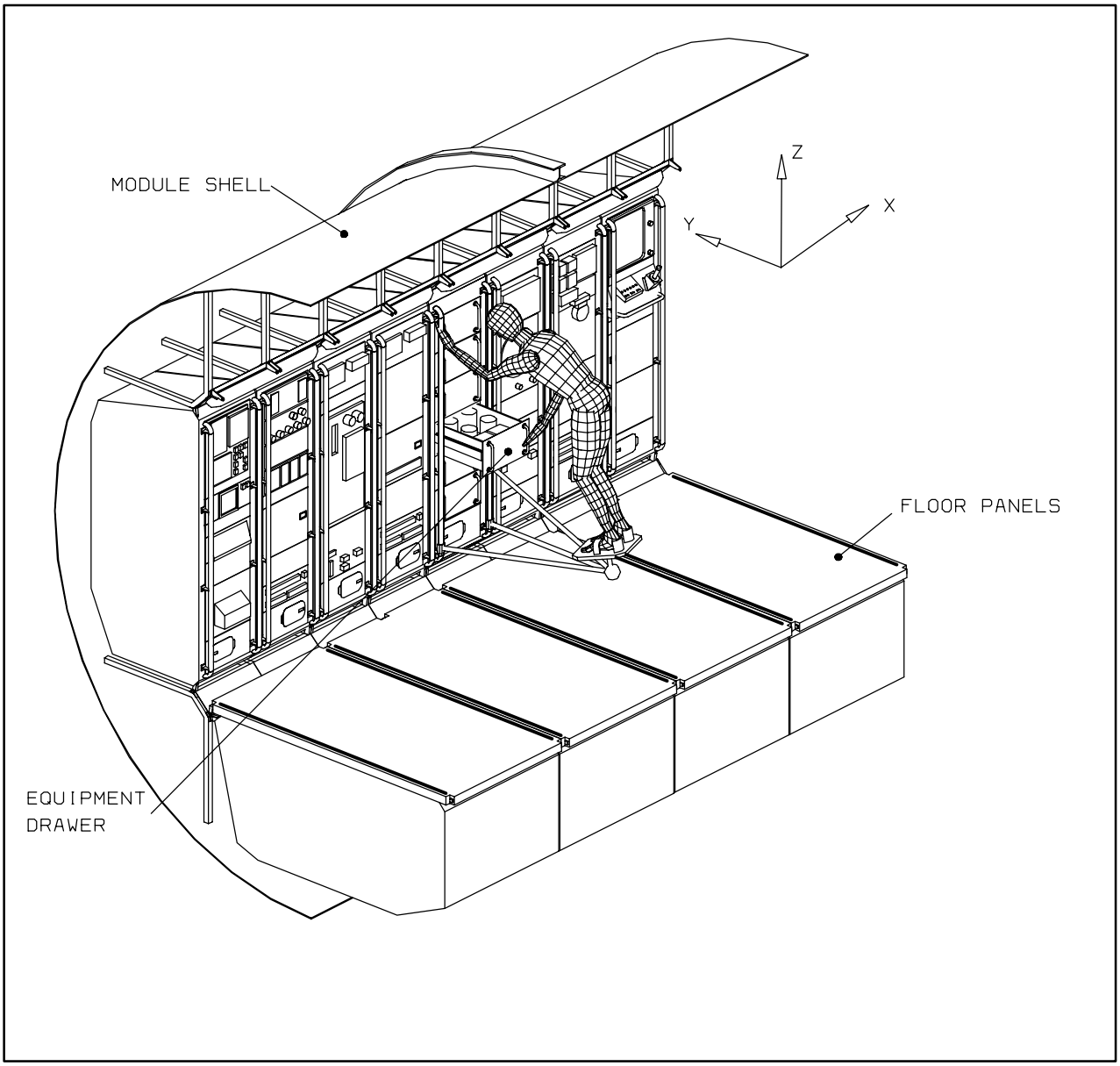

FIGURE 4.2.1.2–2 RACK FRONT ACCESS AND USE OF EQUIPMENT DRAWER (APM CONFIGURATION NOT REPRESENTATIVE)

DaimlerChrysler Aerospace, Bremen – All Rights Reserved – Copyright per DIN 34

4.2.2 CENTRE AISLE PAYLOADS

The APM provides Standard Utility Panels (SUP) integrated in the lower stand–offs. This SUP serve both APM system and payload requirements; i.e. they include on the same panel connectors dedicated for system equipment and payload equipment. For the purpose of payload equipment accommodated in the center aisle two Standard Utility Panels (SUP) at locations labelled as SUP 1 and SUP 4 are available. The other two SUPs (2 & 3) may be used in exceptional cases for further Payload power supply, if required. Figure 4.2–2, Cabin Utility Access Provisions for Payload Centre Aisle, displays the Standard Utility Panel locations.

The Standard Utility Panel (SUP1 & SUP4) provides for payload operation the following interfaces:

- Power connector
- APM IEEE 802.3 LAN connector (APM PCS (Laptop) Terminal connection possible)
- High Rate Data / Video connector
- MIL–STD–1553B Bus connectors (APM Payload Bus)
- Smoke Sensor Interface

The layout of the Standard Utility Panel is shown in Figure 4.2–3, SUP Panel Layout. Table 4.2–1, Connector Allocation and Function, which shows the connector allocation and function at each SUP as far as payload interfaces are concerned.

DaimlerChrysler Aerospace, Bremen – All Rights Reserved – Copyright per DIN 34

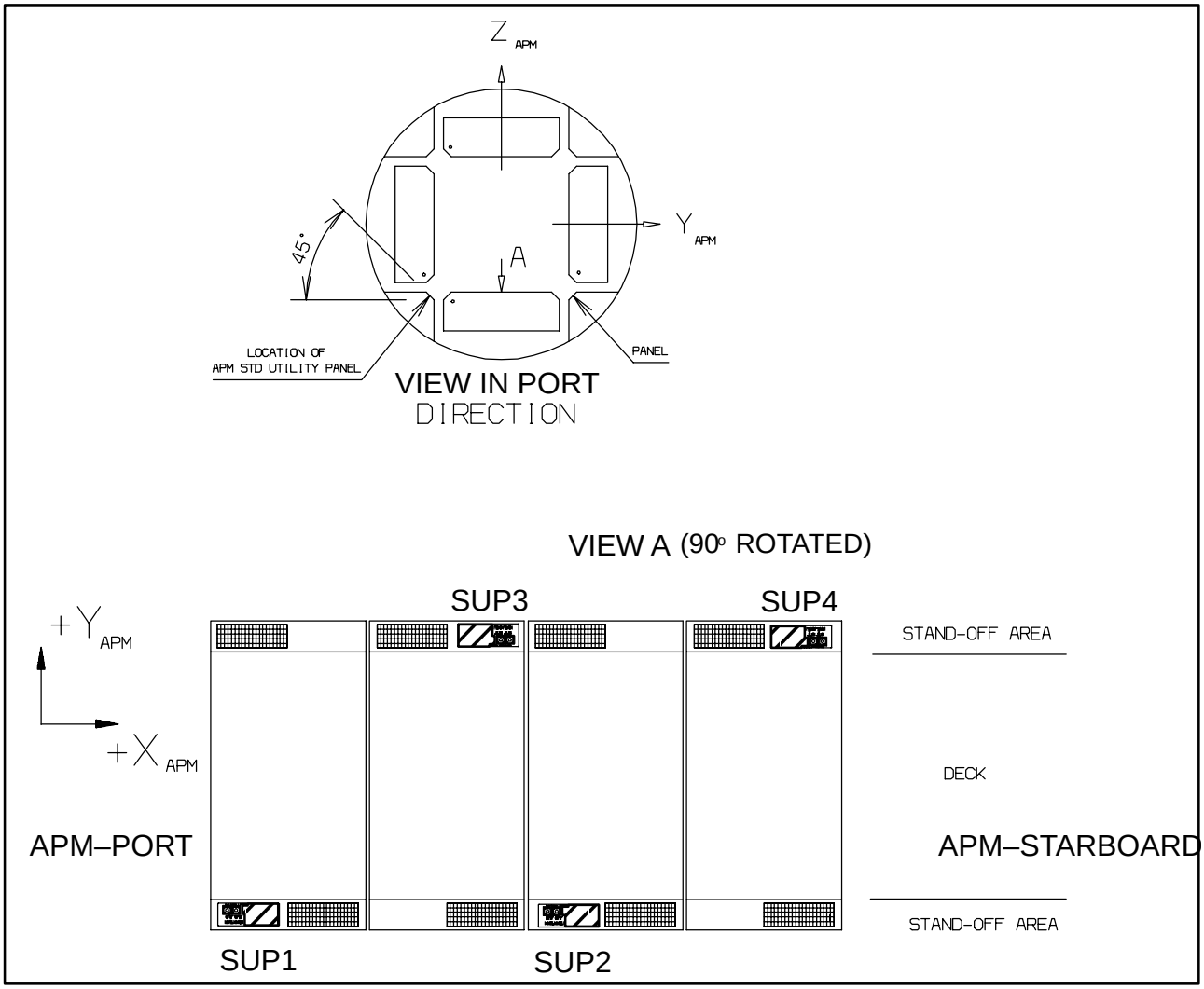

FIGURE 4.2–2 CABIN UTILITY ACCESS PROVISIONS FOR PAYLOAD CENTRE AISLE

DaimlerChrysler Aerospace, Bremen – All Rights Reserved – Copyright per DIN 34

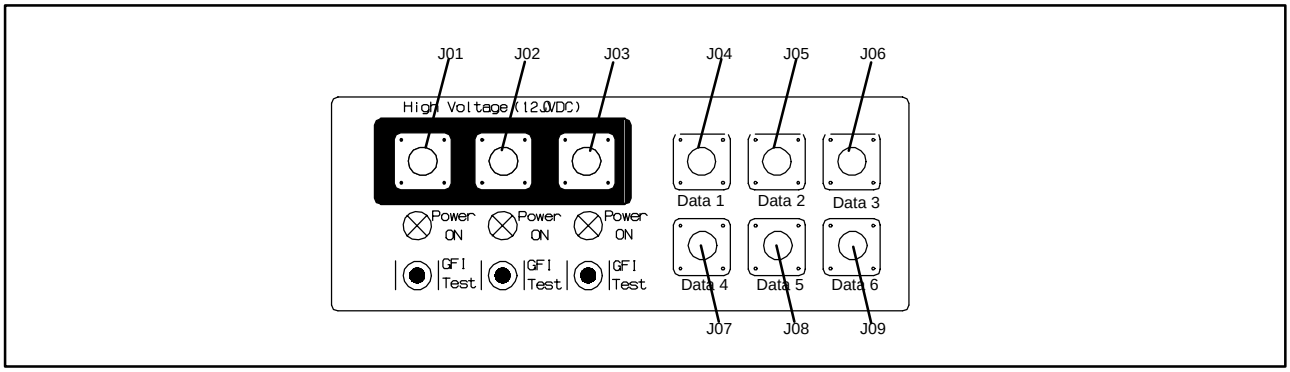

FIGURE 4.2–3 SUP PANEL LAYOUT

TABLE 4.2–1 SUP CONNECTOR ALLOCATION AND FUNCTION FOR APM PAYLOADS

Connector	SUP 1	SUP 2	SUP 3	SUP 4
J 01/Power 2)	PWR 120 V DC / CHeCS Bus	PWR 120 V DC/ C&C Bus 1	PWR 120 V DC/ C&C Bus 2	PWR 120 V DC CHeCS Bus
J 02/Power 2)	PWR 120 V DC	PWR 120 V DC US Lab P/L Bus	PWR 120 V DC US Lab P/L Bus	PWR 120 V DC
J 03/Power4)	PWR 120 V DC	PWR 120 V DC	PWR 120 V DC	PWR 120 V DC
J 04/Data1	APM P/L Bus	Spare	Spare	APM P/L Bus
J 05/Data2	APM IEEE 802.3 Nominal LAN 1)	APM IEEE 802.3 Nominal LAN 1)	APM IEEE 802.3 Nominal LAN 1)	APM IEEE 802.3 Nominal LAN 1)
J 06/Data3	Video/High Rate Data (Fibre Optics)	Spare 3)	Spare 3)	Video/High Rate Data (Fibre Optics)
J 07/Data4	Smoke Sensor/ EWACS	Spare 3)	Spare 3)	Smoke Sensor/ EWACS
J 08/Data5	VCA 5)	Spare 3)	Spare 3)	VCA 5)
J 09/Data6	APM IEEE 802.3 Redundant LAN 1)	APM IEEE 802.3 Redundant LAN 1)	APM IEEE 802.3 Redundant LAN 1)	APM IEEE 802.3 Redundant LAN 1)

1) APM Portable Computer System (PCS) connection and payload IEEE 802.3 LAN interface on a shared usage basis

2) Connector J01 and J02 will not be used by APM payloads. They will be used for the connection of the US Portable Computer System and connection of the CHeCS equipment for human research.

3) Spare means that there is no capability

4) The total power consumption for all centre aisle payloads must be below 500 W

5) Connector J08 will only be used by the APM system cameras. 28V power, sync and video is transmitted via this connector.

DaimlerChrysler Aerospace, Bremen – All Rights Reserved – Copyright per DIN 34

4.2.3 EXTERNAL PAYLOADS

External payloads are accommotaed on External Payload Adapters (ExPAs). The complete integrated ExPA will be attached to the External Payload Mechanism (ExPM) which is part of the APM structure. As shown in figure 4.2.3–1, four ExPMs are accommodated on a structure which is attached to the APM port cone where each has the capability to accommodate one ExPA.

At each ExPM the following interfaces are provided:

- Power
- APM MIL 1553B payload bus
- APM LAN
- Hardwired I/Os for measurements and commands
- APM high rate data link
- US–Lab MIL 1553 bus
- US Lab LAN

DaimlerChrysler Aerospace, Bremen – All Rights Reserved – Copyright per DIN 34

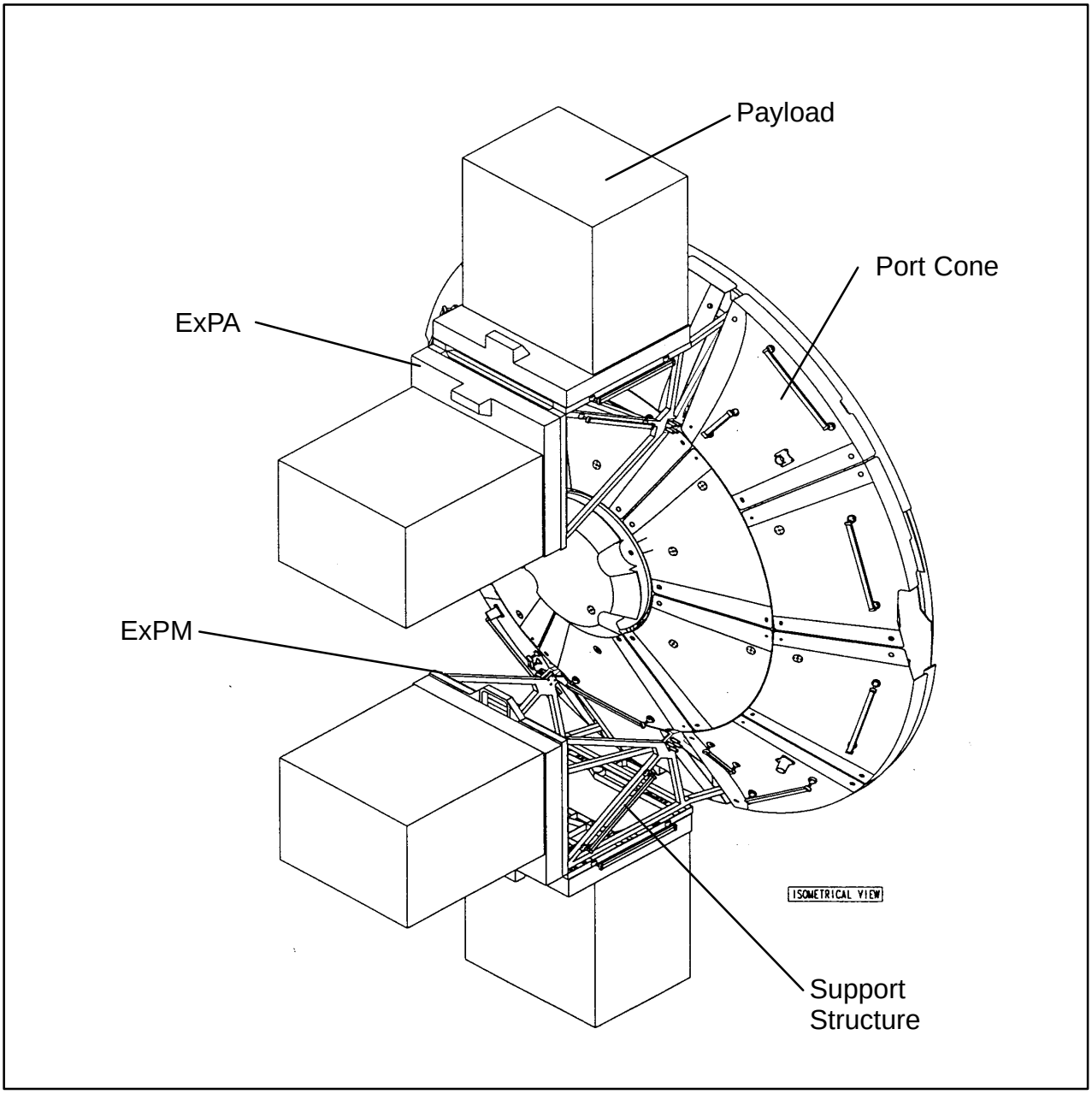

FIGURE 4.2.3–1 APM PORT CONE WITH EXTERNAL PAYLOAD MECHANISMS

DaimlerChrysler Aerospace, Bremen – All Rights Reserved – Copyright per DIN 34

4.3 APM FUNCTIONS

The APM functional architecture is shown in figure 4.3–1.

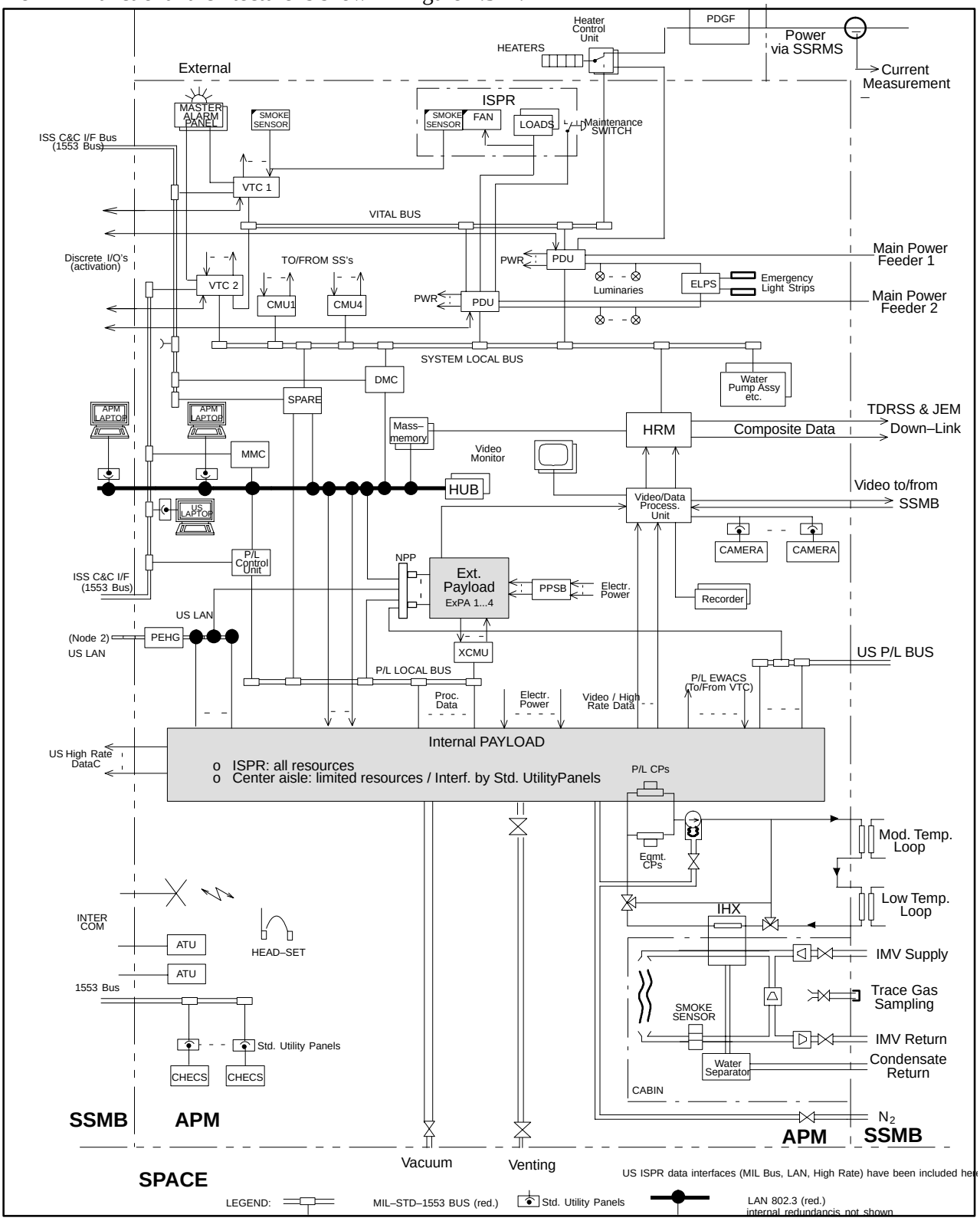

FIGURE 4.3–1 APM FUNCTIONAL ARCHITECTURE

DaimlerChrysler Aerospace, Bremen – All Rights Reserved – Copyright per DIN 34

4.3.1 ENVIRONMENTAL CONTROL

The APM internal environment is affected by

- the presence and control of a normal atmosphere at normal (ground) atmospheric pressure and habitable conditions
- the presence of heat sources and heat sinks
- the shielding effect of the modules shell and (external) thermal insulation against space heat sources (sun, earth) and heat sinks (low temperature background)
- the shielding effect of the modules shell and other equipment material against space/cosmic radiation
- the shielding effect of the modules shell and dedicated ”bumpers” against space debris and particles.

Figure 4.3.1–1, Environmental Control System Overall Schematic depicts the various APM environmental control functions.

Thermal control of the APM internal atmosphere and heat sources is facilitated by

- Moderate temperature water is supplied to deck racks and endcones containing system/ subsystem equipment
- thermal conditioning of the air circulated in the APM habitable volume.
- Moderate temperature water is supplied to all active payload rack locations for cooling purposes.
- Passive thermal control of heat leak/ gain with respect to the environment.

The moderate waterloop section feeds the payload racks in a parallel configuration, i.e. all water inlet temperatures are essentially the same.

Once hooked up, each rack can be individually connected/ disconnected to/ from the water loop by means of remotely controlled on/ off–valves. In terms of overall performance, there is no restriction on the number or combination of the racks to be connected to the water loop, provided that the sum of the individual payload rack dissipations does not exceed the overall heat rejection capability.

Several alternatives can be applied to reject heat generated within a payload rack. A payload may

- use cooling water directly from the APM water loop to cool payload equipment.
- introduce a secondary rack cooling loop using its own primary/ secondary water heat exchanger which connects to the APM water loop (preferred method)
- accommodate equipment on cold plates, which connect to the APM primary water loop

Air/ water heat exchange within a payload rack can be facilitated by heat exchangers and fans. The routing of cooling air needs to be effected by payload equipment. No nominal air exchange is foreseen between payload racks and the APM cabin. Air leakage between ISPRs and the cabin should be minimized.

The total allowable heat dissipation relates to 13.5 kW of electrical power provided plus 1.0 kW of metabolic and exothermal heat apportioned to payloads.

DaimlerChrysler Aerospace, Bremen – All Rights Reserved – Copyright per DIN 34

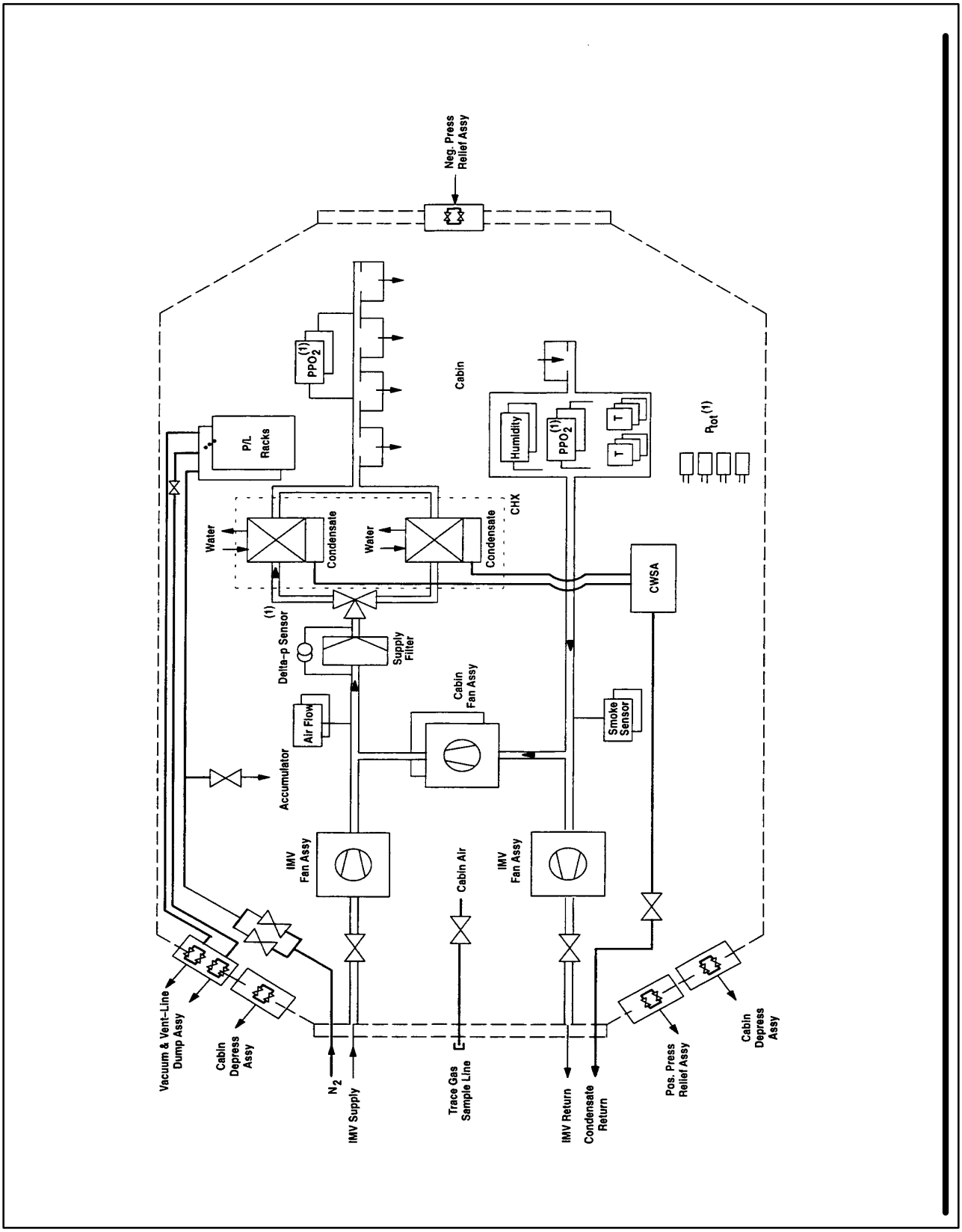

FIGURE 4.3.1–1 ENVIRONMENTAL CONTROL SYSTEM (ECS) OVERALL SCHEMATIC

DaimlerChrysler Aerospace, Bremen – All Rights Reserved – Copyright per DIN 34

Payload equipment installed in the centre aisle may dissipate up to 0.5 kW into the APM atmosphere. This heat is dumped into the water loop via the Condensing Heat Exchanger but has to be included in the total heat allocation for payloads (max. 14.5 kW).

The cabin loop is sized for an additional 0.6 kW of metabolic heat from a crew of three astronauts. When no crew or a smaller crew is present, the surplus heat rejection capability of the cabin loop can be allocated to payloads.

Environmental conditions suitable for the APM mission requirements are maintained by the ECLSS and TCS throughout the APM mission phases. Table 4.3.1–1 reports the thermal/environmental functions versus the APM operational modes. Functions with direct interface to P/Ls are listed on the top.

DaimlerChrysler Aerospace, Bremen – All Rights Reserved – Copyright per DIN 34

TABLE 4.3.1–1 THERMAL/ENVIRONMENTAL FUNCTIONS VERSUS APM OPERATIONAL MODES

MISSION PHASES / SYSTEM FUNCTIONS	Ground Processing (1)	Launch Ascent	Initialization		
			Unberthed Survival	Berthed Survival	Support
N2 Provision to P/L Racks					
Vacuum Provision to P/L Racks					
Venting Provision to P/L Racks					
ATCS P/L Water Cooling					
Total Pressure Monitoring				'	'
O2 Partial Pressure Monitoring				'	'
CO2 Partial Pressure Monitoring				'	'
Positive Pressure Control		'	'	'	'
Negative Pressure Control		'			
Depressurization / Fire Suppression				'	'
Atmosphere Sampling					'
Airborne Contamination Control					'
Support Air Revitalization					'
Air Circulation / Fire Detection					'
Temperature & Humidity Control					'
N2 Provision to TCS					'
PTCS Condensation Prevention via Heaters			'	'	
ATCS S/S Water Cooling					'

DaimlerChrysler Aerospace, Bremen – All Rights Reserved – Copyright per DIN 34

TABLE 4.3.1–1 THERMAL/ENVIRONMENTAL FUNCTIONS VERSUS APM OPERATIONAL MODES (CONTINUED)

MISSION PHASES / SYSTEM FUNCTIONS	Operation under Reduced Performance					Routine Operation		Safe Disposal
	Support		Stand–by	House-keeping	Berthed Survival	Nominal manned	Nominal unmanned	passive
	manned	unmanned						
N2 Provision to P/L Racks						'	'	
Vacuum Provision to P/L Racks						'	'	
Venting Provision to P/L Racks						'	'	
ATCS P/L Water Cooling						'	'	
Total Pressure Monitoring	'	'	'	'	'	'	'	
O2 Partial Pressure Monitoring	'	'	'	'	'	'	'	
CO2 Partial Pressure Monitoring	'	'	'	'	'	'	'	
Positive Pressure Control	'	'	'	'	'	'	'	'
Negative Pressure Control								'
Depressurization / Fire Suppression	'	'	'	'	'	'	'	
Atmosphere Sampling	'	'	'	'		'	'	
Airborne Contamination Control	'	'	'	'		'	'	
Support Air Revitalization	'	'	'	'		'	'	
Air Circulation / Fire Detection	'	'	'	'		'	'	
Temperature & Humidity Control	'	'	' (2)	' (2)		'	'	
N2 Provision to TCS	'	'	'	'		'	'	
PTCS Condensation Prevention via Heaters					'			
ATCS S/S Water Cooling	'	'	'	'		'	'	

Notes: (1) APM functions activated as necessary for check–out

(2) Cabin temperature selectability not required

Table 4.3.1–2, Constituents and Nominal Limits of the APM atmospheric parameters are controlled within the APM.

DaimlerChrysler Aerospace, Bremen – All Rights Reserved – Copyright per DIN 34

TABLE 4.3.1–2 CONSTITUENTS AND NOMINAL LIMITS OF THE APM ATMOSPHERE

Atmospheric Parameters	Nominal Limits
Total Pressure	959 – 1013 mbar
Oxygen Partial Pressure	195 – 231 mbar
Dilute Gas	N_2
Carbon Dioxide	4 mbar max
Relative Humidity	25 % – 70 %
Cabin Temperature	18 °C – 27 °C
Particulate Matter	Class 100 000
Airborne Microbes	1000 CFU/m^3 (Colony Forming Unit)

The APM cabin air temperature is controlled by the ECLSS – THC system and selectable by the crew in specific mission phases. Monitoring is by means of cabin air temperature sensors located within the cabin air return grids. Selectability, when required, has an accuracy of +/– 1 °C. Selectability is limited to a minimum of 21 °C under extreme (unbalanced) APM heat load conditions.

When active control by the ECLSS – THC is required, the temperature differences between different cabin locations is 5.5 °C maximum, exception made for a short distance from cabin air diffusers.

The APM cabin air humidity is maintained by the ECLSS – THC system within the specified limits and it is not selectable by the crew. Monitoring is by means of cabin air humidity sensors located within the cabin air return grids, with an accuracy of ± 5%.

The APM cabin air ventilation is maintained by the ECLSS – THC system within the specified limits and it is not selectable by the crew. Monitoring is not performed.

Ventilation velocities between 0.076 m/s and 0.203 m/s are guaranteed for 67% of the central shaded / chequered ventilation area of the cabin as indicated in Figure 4.3.1–2, Cabin Ventilation Pattern. For the remaining points within the central shaded area, velocities between 0.036 and 1.016 m/s are guaranteed.

Ventilation is also ensured, without specified air velocity limits in the other shaded areas. No cabin air exchange with payload ISPRs is ensured. In case air exchange is required (e.g. for latent heat removal collection), this has to be provided by the payload rack integrator.

DaimlerChrysler Aerospace, Bremen – All Rights Reserved – Copyright per DIN 34

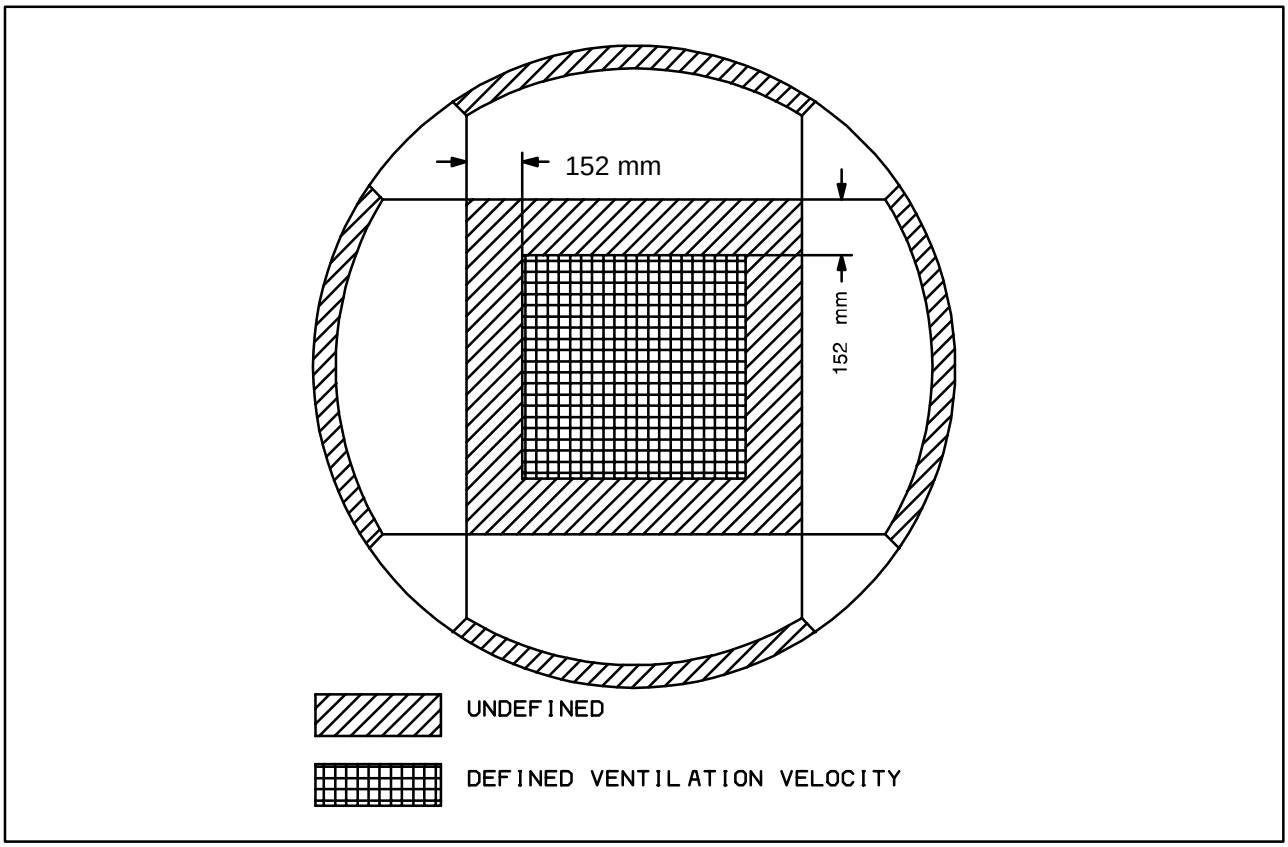

FIGURE 4.3.1–2 CABIN VENTILATION PATTERN

The radiative environment of the cabin is variable between 18 °C and 35 °C for operating conditions, between 0 °C and 50 °C for non–operating, both pressure and vacuum conditions, and between 0 °C and 35 °C for switch–on conditions.

The trace gas environment in the APM cabin atmosphere is controlled via IMV below the SMAC values .

The APM atmosphere may include some experiment by–products, although no toxic matter may be discharged into the APM atmosphere. Payloads handling or producing toxic, particulate or microbial matter have to be operated as contained systems with due control of this matter.

All APM internal pressurized zones are actively designed against the risk and propagation of fire.

The APM venting/ vacuum system is available for

- venting of experiment process chambers with subsequent switch over to vacuum
- venting of cooling and purge gases
- providing a sustaining (pre–) vacuum.

DaimlerChrysler Aerospace, Bremen – All Rights Reserved – Copyright per DIN 34

The dual functions of venting gases and maintaining a defined level of vacuum are implemented by separate vacuum and venting line, so that venting is possible without interrupting or impacting experiments under vacuum.

Both the venting and the vacuum line are routed to each ISPR location at its Utility Interface Panel (UIP) with the exception of the two overhead ISPRs which have no vacuum line interface. Any rack hooked up can be individually connected/disconnected to/from the respective line by means of zero leakage quick disconnects. All payload racks are connected in a parallel configuration.
All venting operations need to be coordinated by the payload master timeline in order to obtain minimum venting times and/or the specified levels of pre–vacuum, and also to minimize cross contamination of payloads.

In the vacuum line the gas loads are sufficiently low, so that parallel use by several experiments is possible at any time. The space vacuum represents the sole active element for evacuating both the venting and the vacuum line. The achievable vacuum conditions depend on the location of the particular rack within the vacuum system. Payloads requiring vacuum levels which the APM system cannot provide, need to employ a dedicated pump which discharges into the vacuum line.

Gaseous nitrogen is supplied to each ISPR location.

4.3.2 ELECTRICAL POWER

The APM provides the necessary capabilities to distribute, protect and monitor the electrical power supply to payloads. The distribution system includes the resettable, commandable or automatic/ programmable function of switching currents to the different power outlets at the ISPR UIP and additional centre aisle SUP positions. Electrical energy is provided to payloads as direct current of nominally 123 V via Power Distribution Units (PDUs).

The outlet protection and wires are sized for 3.0 kW and 6.0 kW of nominal ISPR main power.
In addition, each ISPR can be supplied with 1.2 kW auxiliary power, if required.

For a nominal situation, where 20 kW are supplied from the Space Station power system to the APM, the total payload complement can consume a maximum of 13.5 kW of electrical power. Up to 12.5 kW combined payload and APM subsystem power can be drawn from each PDU.

The distribution scheme for ISPRs is one failure tolerant, i.e. any single failure in the APM electrical power distribution system will not lead to simultaneous loss of main and auxiliary power supply.

With the capabilities quoted, the distribution of electrical power can be reconfigured on a scheduled basis for varying demands of the payload complement. This reconfiguration can be obtained either remotely controlled from ground, or automatically by timelined command sequences.

DaimlerChrysler Aerospace, Bremen – All Rights Reserved – Copyright per DIN 34

External payloads can be supplied with up to 2.5 kW of electrical power which is part of the total payload complement power. Two power interfaces are available at each ExPM where one power interface is fed by PDU 1 and the other by PDU 2. The maximum power per feeder is limited to 1.25 kW.

The APM provides at all four SUP locations one payload dedicated outlet sized for electrical power of 1200 W max. continous each. However thermal dissipation constraints limit the power consumption to 500 W max. continous for the entire cabin area.

4.3.3 COMMUNICATIONS

The APM provides capabilities enabling audio and video communications inside the APM, with the ISS crew, and with the ground crew and enabling data communications inside the ISS, with the SSMB system, and with the ground system. The Video/ Data Processing Unit (VDPU) is the nucleus of the APM video distribution system and provides routing of high rate data to/from payloads within ISPRs and centre aisle payloads.

4.3.3.1 AUDIO COMMUNICATIONS

The audio communications allow full duplex communication between crew astronauts using Audio Terminal Units (ATUs) at fixed locations in the APM for hardwired NASA provided headsets. By paging selection it is possible to establish one to one, or multi–conference links between crew members located in the APM, in the rest of the Space Station and on ground.

4.3.3.2 VIDEO COMMUNICATIONS

The video communications system provides capabilities to:

- take video scenes of the APM cabin with system video cameras, either installed in predefined locations at the APM end cones, installed at any seat track inside APM, or handheld
- command video cameras from SSMB or ground via SSMB video system support
- display payload generated PFM NTSC video on the onboard monitors
- record and playback video sequences from either APM cameras or payload generated video
- route the above video signals to ground
- display video signals coming from the SSMB
- route video signals from one payload rack to another
- compress the video image in order to minimize the downlink bandwidth.

The video images, which can be managed onboard and transmitted to ground can be

- full colour, full motion television of commercial quality (E/A–RS 170A NTSC standard),

DaimlerChrysler Aerospace, Bremen – All Rights Reserved – Copyright per DIN 34

Only one video signal, either from the system or from a payload, can be transmitted at a time to the ground. The reason is the single video compressor in the VDPU.

In addition to the video communication with a video signal according to NTSC standard, the payload has the capability to route any digitized video signal as high rate data TAXI encoded within the 32 Mbps bandwidth limitation to ground. High rate data of different payloads can be transmitted to ground in parallel as long as the maximum bandwidth will not be exceeded.

DaimlerChrysler Aerospace, Bremen – All Rights Reserved – Copyright per DIN 34

4.3.3.3 DATA COMMUNICATIONS

The data communications are defined as internal APM communications, as APM to SSMB communications and as APM to ground communications.

Internal APM data communications for European payloads are based on the MIL–STD–1553B Payload bus and the APM LAN, distributed to each payload location (ISPRs, SUP and ExPM) and allow communication with the APM DMS.

There are the following capabilities provided for US racks hosted in the APM:

- The APM routes the US–Lab P/L 1553B Bus (nominal and redundant) from the bulkhead to each active ISPR location and to two Standard Utility Panels (SUPs) for the operation of US– Payloads hosted in the APM with the payload MDM in the US–Lab.
- In addition the APM routes the US LAN–2 from the bulkhead to each active ISPR location for the operation of US– Payloads hosted in the APM.
- The APM provides 20 fibre optical lines to the SSMB APS, the High Rate Data Link (HRDL). Two fibre optical lines are routed to each ISPR location. The HRDL will be only used by US payloads hosted in the APM for high rate data transmission to/from the Space Station Automated Payload Switch (APS). The high rate data may be routed between different ISPRs or to the ground system.
- External US payloads on an ExPM may use the MIL 1553B bus and LAN interface for communication with the US–Lab DMS. One LAN and the redundant US MIL bus is routed to each ExPA (see figure 4.3.4.1–2).

Data communications between the APM DMS and the SSMB is executed via the C&C system data bus. APM system and payload status data, telecommands to APM system and payloads, and ancillary data are transmitted via this interface.

Data communications between APM and ground are provided through the SSMB communication and tracking system.
Payload low rate telemetry is routed on the APM Payload bus to the PLCU, from the PLCU via the APM LAN and the MMU to the HRM, and from there via the Ku–Band to the ground system.
Payload medium rate data are routed via the APM IEEE 802.3 LAN and the MMU to the High Rate Multiplexer for further downlinking via the Ku–Band.
Payload high rate data are routed directly from each payload rack, centre aisle payload or external payload via the VDPU to the HRM, and from there via the Ku–Band to the ground system.
Payload commands will be sent from the ground system via the S–Band link to the onboard system. The commands can be sent either via the Payload MIL bus (RT protocol) or the APM LAN (CCSDS protocol).

4.3.3.4 ISS LOSS–OF–SIGNAL RECORDER

The ISS provides the capability to record payload downlink data during TDRSS LOS periods. Details of the implementation and available resources are TBD.

DaimlerChrysler Aerospace, Bremen – All Rights Reserved – Copyright per DIN 34

4.3.4 ONBOARD DATA PROCESSING

4.3.4.1 APM DMS CONFIGURATION

The APM Data Management System (DMS) provides APM system services, and the data processing and data routing service for the APM payload. The DMS configuration (see figure 4.3.4.1–1, APM DMS configuration and figure 4.3.4.1–2, APM External Payload DMS Configuration) consists of:

- a vital section for support to APM system activation/deactivation and EWACS services for APM system and APM payloads.
- a nominal section for overall APM system administration and resource management, processing/routing/packetization of system and payload data, timeline management execution, transmission of time and ancillary data.
- a payload section for APM payload operation.

The data processing function of the nominal section is implemented by a pool of four identical computers with different task allocations, i.e.:

- Data Management Computer (DMC) provides central data acquisition for the APM subsystems as well as S/S closed loop control applications. In addition the DMC activates, supervises and reconfigures a subset of DMS equipments, including the PLCU.
- Mission Management Computer (MMC) is responsible for overall mission management including mission timelining and the APM system fault detection, identification & recovery (FDIR) function. In addition the MMC routes CCSDS packets (commands) from the SSMB to the payload LAN interface, and CCSDS packets (command responses) from the payload LAN interface to the ground. The Mastertimeline (MTL) is also running on the MMC.
- Payload Control Unit (PLCU) provides APM payload bus control, payload telemetry/command routing and executes payload application software (if required). In addition the PLCU provides all the standard APM DMS services to payloads such as data acquisition and data processing.
- A Spare Computer in cold redundancy in case of malfunction of any of the other computers.

The mass memory units (MMUs) are responsible for the storage of the onboard system configuration data. The two mass memory units are both active, where one MMU is the backup. The MMUs act as a file server via the APM IEEE 802.3 LAN network for the four computers. Up to 100 Mbyte storage capability for payload configuration files in total is provided.

The APM IEEE 802.3 LAN is an Ethernet network in accordance with 10 Base–T and provides a star topology around redundant HUBs. Sufficient ports are available to connect all ISPRs, centre aisle payloads and ExPMs to the APM LAN.

DaimlerChrysler Aerospace, Bremen – All Rights Reserved – Copyright per DIN 34

APM system laptops as crew interface (HCI) can be connected to the APM LAN at two Standard Utility Panels (SUP) located in the centre aisle lower stand– offs. The APM system laptops are mainly used for APM system command and control, but they may also be used as the crew interface for payload operations if this is required. Possible payload operations on the system laptop are quicklook of payload science data, execution of payload crew procedures and triggering of commands to payloads.

In addition to APM laptops, payload developer supplied laptops (PD laptops) may be connected directly to payload facilities and can be used as crew interfaces for payload operations.

DaimlerChrysler Aerospace, Bremen – All Rights Reserved – Copyright per DIN 34

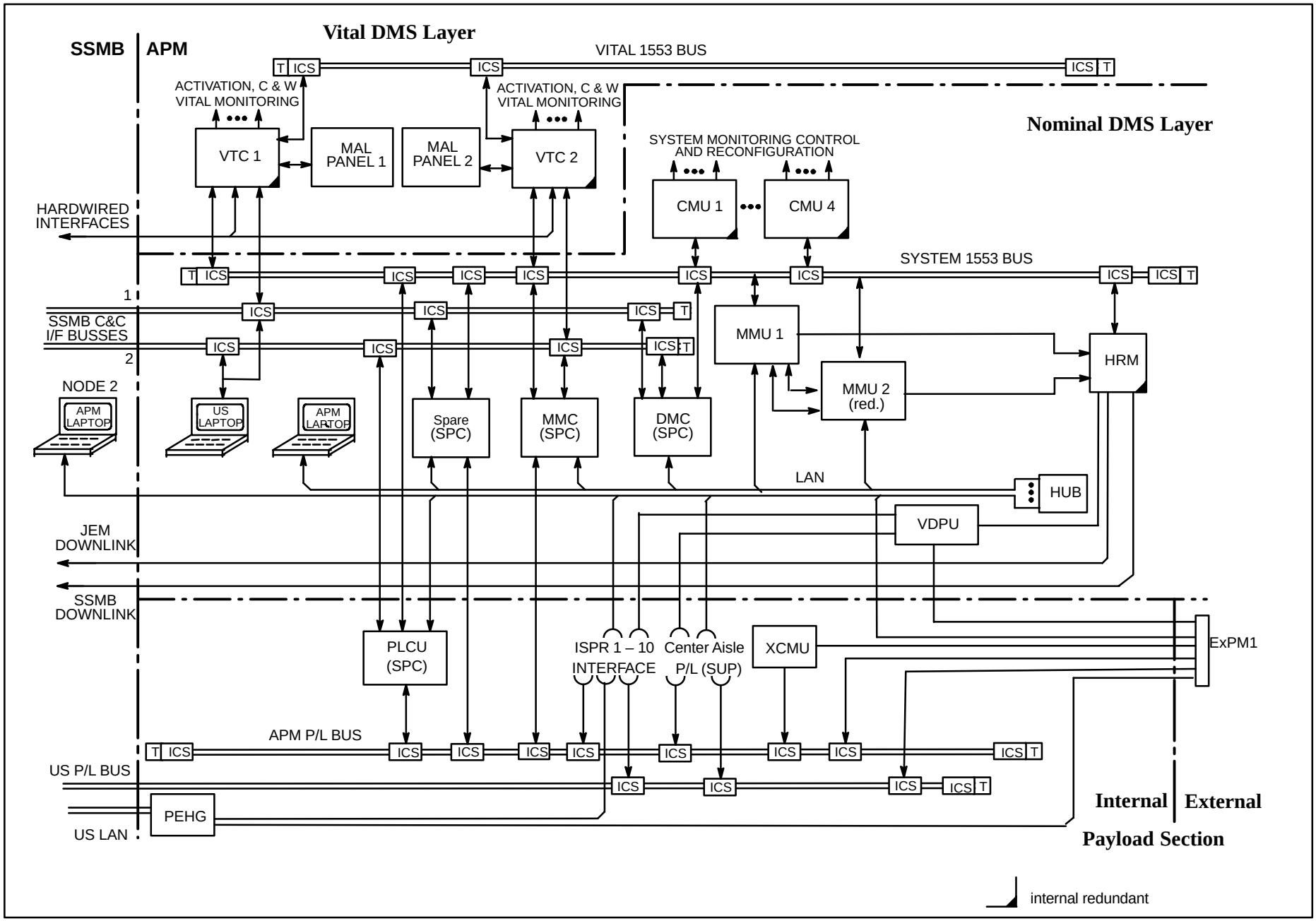

FIGURE 4.3.4.1–1 APM DMS CONFIGURATION

DaimlerChrysler Aerospace, Bremen – All Rights Reserved – Copyright per DIN 34

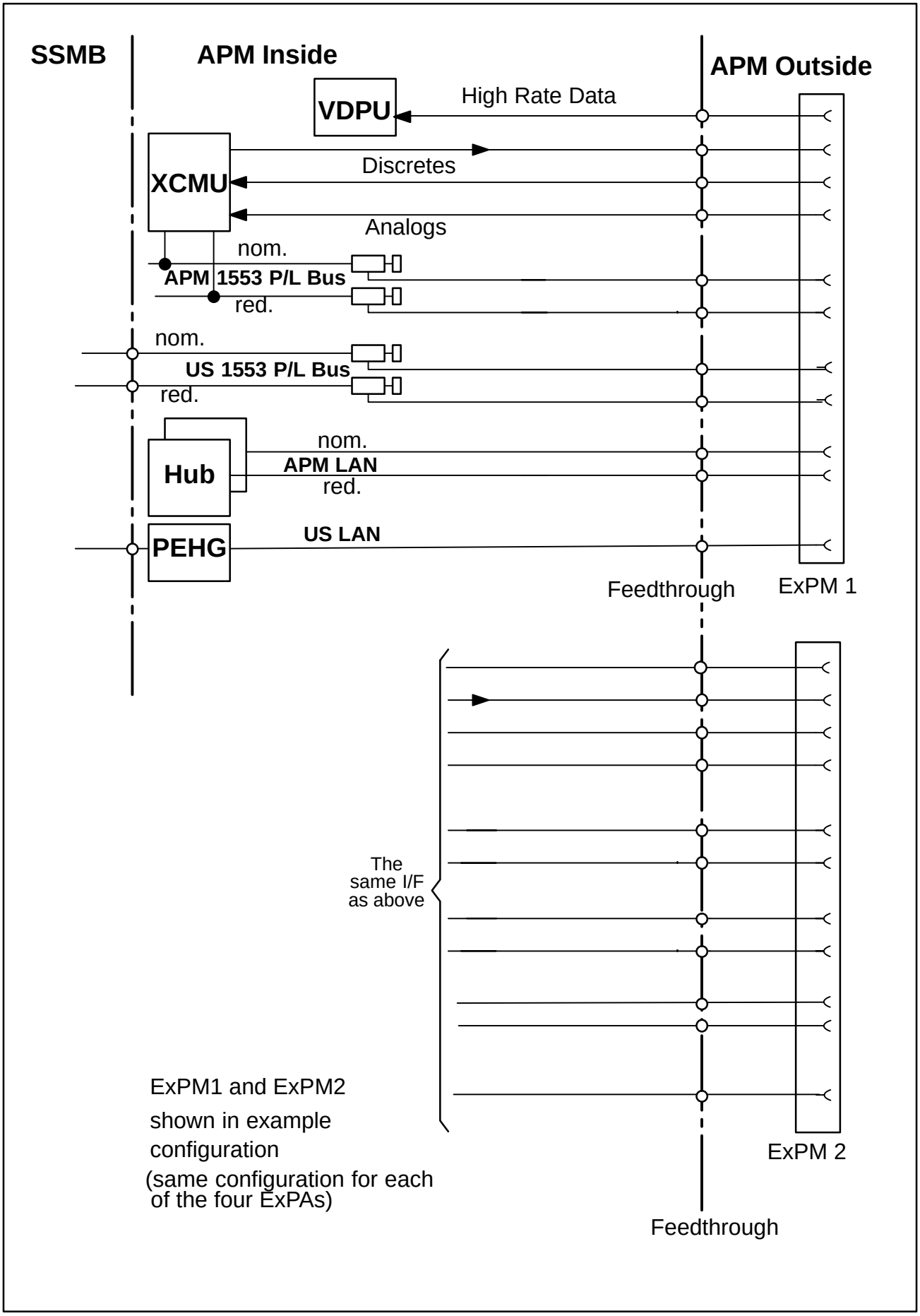

FIGURE 4.3.4.1–2 APM EXTERNAL PAYLOAD DMS CONFIGURATION

DaimlerChrysler Aerospace, Bremen – All Rights Reserved – Copyright per DIN 34

4.3.4.2 PAYLOAD CONTROL UNIT (PLCU)

In addition to standard services such as RT protocol commanding, data acquisition, data monitoring, data processing, and time signal broadcasting, the PLCU also supports the execution of P/L dedicated applications such as payload experiment process and closed loop control. The coding of payload dedicated application software is the responsibility of the Payload developer. The application will be integrated and verified by the Payload Mission Integrator.

Since the APM DMS provides no hardwired digital I/O's at the ISPR and centre aisle (SUP) interface, the typical payload activation sequence is accomplished by a payload processor booting mechanism after payload power–up. During the payload processor boot mechanism the MIL–STD–1553B bus communication, respectively the LAN communication, and the high rate data communication shall be initialized, so that the payload is able to perform the data communication after finalization of the boot process.
When the payload has been activated and is in running mode, it would be possible to reinitialize/reset the payload by a MIL bus or LAN command, if such a command has been established by the payload.
In the case of NASA payloads hosted onboard the APM, the above standard services and payload software applications will be executed in the US–Lab payload MDM and are not further discussed here.

4.3.4.3 APM PAYLOAD BUS

Payload facilities either in ISPRs, in the centre aisle, or at the external payload mechanism act as Remote Terminals (RTs). The Bus Controller (BC) function for both redundant APM Payload MIL–STD–1553B buses also resides in the PLCU, thus providing data flow control for all transmissions between ISPRs and PLCU.

The data transfer for European payloads is performed by using the RT protocol. In order to use the APM DMS, payloads as a minimum have to interface the APM payload bus. The payload MIL Bus can be used by payloads for:

- RT protocol commanding initiated either by ground or PLCU application
- low rate telemetry
- health and status data
- time reception

DaimlerChrysler Aerospace, Bremen – All Rights Reserved – Copyright per DIN 34

4.3.4.4 APM LAN

Each ISPR payload, centre aisle payload and external payload may be connected to the APM LAN, which is an Ethernet network. There are two LAN interfaces at each UIP, SUP, and ExPM. The LAN can be used by payloads for:

- transmission of telemetry to ground via Ku–Band
- command distribution to the payload from ground, MTL, PLCU SWOP, or PLCU FLAP
- command distribution from a payload to a PLCU SWOP (e.g. ancillary data request)
- data transfer (e.g. ancillary data) between a PLCU SWOP and the payload
- transmission of payload data to a system laptop (quicklook data)
- file transfer between the payload and the system MMU

4.3.4.5 APM HIGH RATE MULTIPLEXER

The APM High Rate Multiplexer (HRM) via the VDPU can be used by payloads to transmit high rate digital payload science data or payload PF modulated NTSC video to the ground. Two fibre optic interfaces are provided at each ISPR location. Payloads may use either one fibre optic on a shared basis for video and high rate data transmission, or may use one fibre optic for PFM NTSC video transmission and the second fibre optic for digital data transmission.
For centre aisle payloads one fibre optic is provided at SUP location 1 and one at SUP location 4 which may be used either for PFM NTSC video or high rate data transmission.
External payloads can transmit high rate data via an electrical TAXI interface. Each ExPM provides two high rate data interfaces which are cold redundant and which can be reconfigured by the VDPU.

4.3.4.6 HUMAN COMPUTER INTERFACE AND CREW SERVICES

Onboard payload activation and operation as well as timelined resource management will be governed by a set of plans and procedures. Most important for the on–board and ground crews is the Onboard Short Term Plan (OSTP) and an integrated collection of procedures and further reference material named the Operations Data File (ODF). The APM portion of the OSTP will be displayed electronically on APM system laptops. The APM system laptop is a portable computer which forms a significant part of the APM man–machine interface (MMI). It supports on–board crew for control and operation of the APM via internal system interfaces. Most of the functionality is automatically performed, in order to allow autonomous operation. The PWS provides processing and display functionality and local storage capability to enable the onboard crew to work with:

- electronic and interactive crew procedures
- graphical control displays, indicating status parameter, measurements and system/subsystem configurations
- timeline viewer showing the status of the Mastertimeline (MTL)
- computer based documentation

DaimlerChrysler Aerospace, Bremen – All Rights Reserved – Copyright per DIN 34

For APM operations the APM system laptop is connected electrically by an umbilical via a Hook–Up point to the LAN for communication and to the Electrical Power Distribution System (EPDS) for power feeding. The PWS will be mounted mechanically to seat–tracks by quick disconnects. The seat–tracks are located on ISPRs.
A commercial laptop of the IBM product family ‘Thinkpad‘ is used station wide as portable computer system for use of on–board crew. The computer model will be Thinkpad 760 ED with the operating system Solaris 2.5 .

Payload provided private laptops may be connected directly to the payload facility, but not to the APM LAN (see figure 4.3.4.6–1, Laptop I/F to Payload). It is the payload responsibility to provide hardware and software for the payload private laptop.

Possible payload operations on the system laptop are quicklook of payload science data, execution of payload crew procedures and triggering of commands to payloads. The payload developer is responsible for development of payload dedicated applications on the system laptop, if any application is required. The payload mission integrator is responsible for the integration of system laptop applications and configuration of the system laptop for payload operations.
In case of quicklook data the payload will transmit the data directly to one of the laptops via the LAN. The PLCU will not be involved in this communication but the DMS services on the laptop will establish the CCSDS communication between the payload and the laptop. In case of laptop synoptic commands, the CCSDS communication will be performed between a dedicated PLCU application, which will be started by the laptop command, and the payload.
The traffic budget used for the communication between the laptop and the payload will be part of total LAN budget. Therefore the laptop communication (quicklook data visualization) will be a scheduled task.

DaimlerChrysler Aerospace, Bremen – All Rights Reserved – Copyright per DIN 34

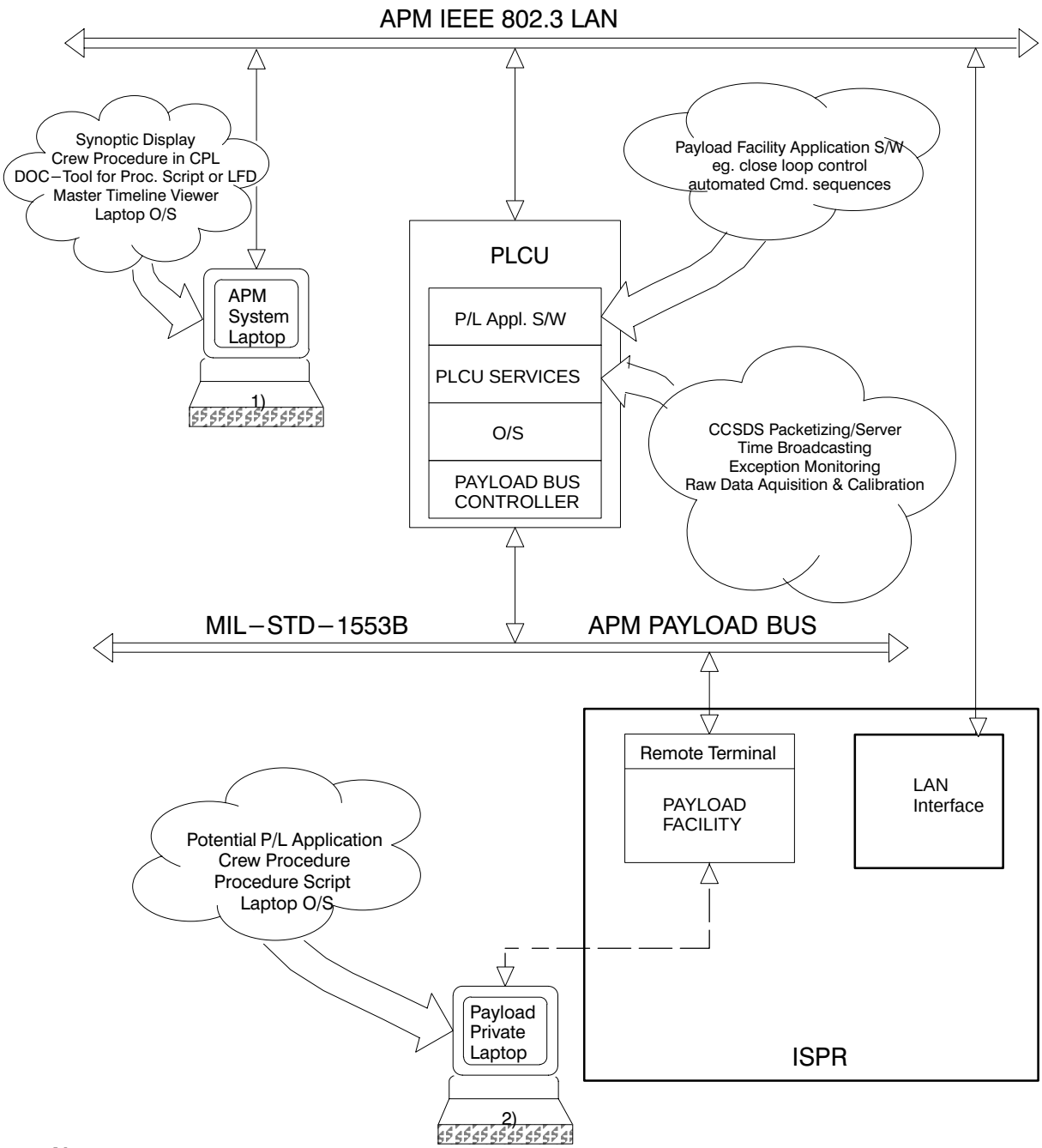

Note

1) Mission Manager provided APM System Laptop including mission–peculiar S/W (Quick Look display incl. application S/W). Payload Mission integrator responsible for payload related software on laptop.
2) Payload Developer provided Laptop and Software with Human Computer I/F similar to APM Laptop

FIGURE 4.3.4.6–1 LAPTOP (PCS) I/F TO PAYLOAD AND PLCU SERVICES

DaimlerChrysler Aerospace, Bremen – All Rights Reserved – Copyright per DIN 34

4.3.5 PAYLOAD OPERATION EXECUTION SUPPORT

The payload operation execution is governed by the APM Master Timeline as explained in more detail in section 5.6.7.

In addition to that the APM provides telemetry and telecommand services, for scientific telemetry to the end user, for health & status data telemetry to the APM Control Centre (APM–CC), for uplink of the mission timeline; and for uplink of direct telecommands to payload. Telemetry and telecommand services use the communication capabilities described in chapter 4.3.3.

Space Station and APM ancillary data are available in the APM datapool and can be provided to payloads via the LAN Interface, if this is required.

The Payload Control Unit (PLCU) provides the processing environment and services necessary to execute payload ADA application programs (SWOPs) and payload Flight Automated Procedures (FLAPs).

DaimlerChrysler Aerospace, Bremen – All Rights Reserved – Copyright per DIN 34

4.4 APM MISSION PHASES AND PAYLOAD RESOURCES AVAILABILITY

A defined set of APM flight configuration system functions are provided in specific APM mission phases.

Table 4.4–1, APM Mission Phases Definition, defines the specific mission phases by characterizing the associated start event and providing a qualitative description.

Table 4.4–2 and table 4.4–3, Payload System Function versus Mission Phases, identifies which payload–related system functions are provided in which mission phase.

DaimlerChrysler Aerospace, Bremen – All Rights Reserved – Copyright per DIN 34

TABLE 4.4–1 APM MISSION PHASES DEFINITION

MISSION PHASE			START EVENT *	QUALITATIVE DESCRIPTION
PHASES	MODES			
Ground Proc.			Acceptance at the AIT site	Initial P/L integration. Transport of the APM to launch site and processing until lift–off
Launch Ascent	Passive		NSTS Shuttle lift–off	Transport of the APM by NSTS Shuttle to the ISS. The APM provides no active resources for payload operations
Initialization	Unberthed Survival (APM grappled by SSRMS)		Grapple by ISSA–RMS and Switch–on of SSRMS power to APM	Minimum survival mode of APM by provision of power via SSRMS to APM for thermal conditioning only
	Berthed Survival 3)		Connect utilities, availability of power for essential command & control functions	Survival mode of APM based on external resources from the ISS
	Support		Preparation for nominal APM operations	Initial activation from survival to full APM system performance including crew support but excluding P/L operations
OPS under reduced performance	Support	manned	(Re–)preparation for nominal APM ops excluding P/L	Re–activation to full system performance excluding P/L ops
		unmanned	(Re–)preparation for nominal APM ops excluding crew and P/L	Re–activation to full system performance excluding crew and P/L ops
	House–keeping		Setting of APM to a reduced but active mode including min. crew support, excluding P/L ops	Survival conditions for crew (max. two persons not working)
	Stand–by unmanned 1)		Setting of APM to a reduced but active mode excluding crew support and P/L ops	Survival condition for equipment (including P/L); allows quick re–activation
	Berthed Survival 2)		Switch to exclusively power to heater and essential command & control function	Degraded survival of APM and P/L based on external resources; EVA suit necessary
Routine Ops	Nominal	manned	Start of P/L and crew ops	In orbit nominal operations with crew including maintenance and servicing
		unmanned	Start of P/L ops	In orbit nominal autonomous operations
Safe Disposal	Passive		Grapple by SSRMS	Installation of APM in NSTS Shuttle Cargo Bay; departure for re–entry

Legend:

* End event identical with start event of the phase that follows.

1) Objective: Contingency repair

2) Objective: Power Saving

3) Prior to the Berthed Survival Mode the APM is berthed and in Passive Mode (same as for Launch/ Ascent)

DaimlerChrysler Aerospace, Bremen – All Rights Reserved – Copyright per DIN 34

TABLE 4.4–2 PAYLOAD SYSTEM FUNCTIONS VS. MISSION PHASES

MISSION PHASES/ SYSTEM FUNCTIONS	Ground Processing *)	Launch / Ascent	Initialization		
			Unberthed Survival	Berthed Survival	Support
Electr. power to P/L	–	–	–	–	–
Heat removal from P/L	–	–	–	–	–
Onboard data processing for P/L (incl. interface to onboard crew)	–	–	–	–	–
Up–/down links for P/L data	–	–	–	–	–
Vacuum/venting for P/L	–	–	–	–	–
N2 provision to P/L	–	–	–	–	–
Video provision for P/L	–	–	–	–	–
APM housekeeping and ancillary data distribution to P/L	–	–	–	–	–

TABLE 4.4–3 PAYLOAD SYSTEM FUNCTIONS VS. MISSION PHASES (CONT.)

MISSION PHASES/ SYSTEM FUNCTIONS	Operation under Reduced Performance					Routine Operation		Safe Disposal
	Support		House–keeping	Stand–by unmanned	Berthed Survial	Nominal manned	Nominal unmanned	passive
	manned	un–manned						
Electr. power to P/L	–	–	–	–	–	X	X	–
Heat removal from P/L	–	–	–	–	–	X	X	–
Onboard data processing for P/L (incl. interface to onboard crew)	–	–	–	–	–	X	X	–
Up–/down links for P/L data	–	–	–	–	–	X	X	–
Vacuum/venting for P/L	–	–	–	–	–	X	X	–
N2 provision to P/L	–	–	–	–	–	X	X	–
Video provision for P/L	–	–	–	–	–	X	X	–
APM housekeeping and ancillary data distribution to P/L	–	–	–	–	–	X	X	–

*) All Functions activated as necessary for check–out

DaimlerChrysler Aerospace, Bremen – All Rights Reserved – Copyright per DIN 34

4.4.1 APM INITIAL PAYLOAD LAUNCH CONFIGURATION

Due to the NSTS Shuttle Orbiter launch capabilities the APM is not launched fully equipped with payload racks. In addition, rack distribution has to be optimized with respect to center of mass constraints imposed by the launch vehicle. After delivery to orbit the payload racks will be relocated to their normal assigned rack location. The optimization is the task of the initial payload mission integrator. Each rack reallocation will be analysed thoroughly prior execution.

4.5 APM SYSTEM GROUND SUPPORT EQUIPMENT FOR PAYLOAD OPERATIONS

The APM System Ground Support Equipment (GSE) comprises the

- Mechanical Ground Support Equipment (MGSE)
- Fluid Ground Support Equipment (FGSE)
- Electrical Ground Support Equipment (EGSE)
- Software Design and Development Facility (SDDF).
- Software Integration and Test Environment (SITE).
- Hardware/ Software Integration & Test Environment Electrical Test Model (ETM)

With the exception of FGSE, the APM GSE supports payload ground operation for the initial payload as identified in Table 4.5–1, APM System Ground Support Equipment for Payload Operation.

For further details refer to section 7.0.

Prior integration of payload racks into the APM system, the payload rack interfaces will be checked with the Rack Level Test Facility (RLTF).

TABLE 4.5–1 APM SYSTEM GROUND SUPPORT EQUIPMENT FOR PAYLOAD OPERATION

APM System GSE	Payload Provisions
MGSE	o Lifting of P/L racks including P/L o Installation of P/L racks into APM
EGSE	o Payload data processing in payload provided EGSE with interface to APM EGSE o Decommutation of payload high rate data with ground HRMD as part of the APM EGSE
SDDF	o Environment for P/L application SW development and integration
SITE	o Software Integration and Test Environment
ETM	o Environment for Hardware/ Software Compatibility Test

DaimlerChrysler Aerospace, Bremen – All Rights Reserved – Copyright per DIN 34

5 SYSTEM FUNCTIONS SUPPORTING PAYLOAD ACCOMMODATION

This section defines and describes in detail the capabilities and interfaces of the APM system involved in support of the payload system functions.

5.1 STRUCTURES AND MECHANISMS

The main structures supporting payload accommodation are the

- International Standard Payload Racks (ISPRs)
- attachment provisions for center aisle equipment
- External Payload Adapters

5.1.1 INTERNATIONAL STANDARD PAYLOAD RACK (ISPR)

As explained already in chapter 3.2, ISPRs are defined as racks which are interchangeable between the US–Lab, JEM and APM Module. Although the APM design provides the required interfaces to support this interchangeability, the APM design itself does not include a rack structure. ISPR rack structures are available from NASA and NASDA. For reference purposes this chapter describes details of the NASDA ISPR (Reference Document 2.2.8) design and mechanical user interfaces. Details of the NASA ISPR can be found in Reference Document 2.2.4.

The NASDA ISPR is the basic structure for ESA payload equipment and is mounted on–orbit to an ISPR location.The rack structure is 2013.5 mm high and 1046 mm wide. The back of the rack is 858 mm at its deepest point. The NASDA ISPR is available in a four–post configuration as shown in Figure 5.1.1–1 through 5.1.1–4, NASDA Four–Post ISPR, Rack Assy I/F Dimensions and a six–post configurations as shown in Figure 5.1.1–5 through 5.1.1–7, NASDA Six–Post ISPR Rack Assy I/F Dimensions. The figures are shown for reference only.
Although not shown in figures 5.1.1–1 to 5.1.1–7, the ISPR shall be delivered with seat tracks attached to the rack front posts in order to allow temporary installation of payload equipment and crew aids.

The six–post configuration structurally supports up to 704 kg payload mass and 1.2 m^3 of internal volume for user equipment.

The four–post configuration structurally supports up to 418 kg payload mass and 1.35 m^3 of internal volume for user equipment.

The NASDA ISPR provides holes for accessing the rack's interior as shown in Figures 5.1.1–2, NASDA Four–Post ISPR, Rack Assy I/F Dimensions and 5.1.1–7, NASDA Six–Post ISPR, Rack Assy I/F Dimensions. Side and rear access panels are provided as part of the rack structure and are attached to the rack with captive fasteners. The panels may be removed during payload integration on ground and for on–orbit access.

The rack is made of aluminium structural elements.The rack is not a sealed structure.

DaimlerChrysler Aerospace, Bremen – All Rights Reserved – Copyright per DIN 34

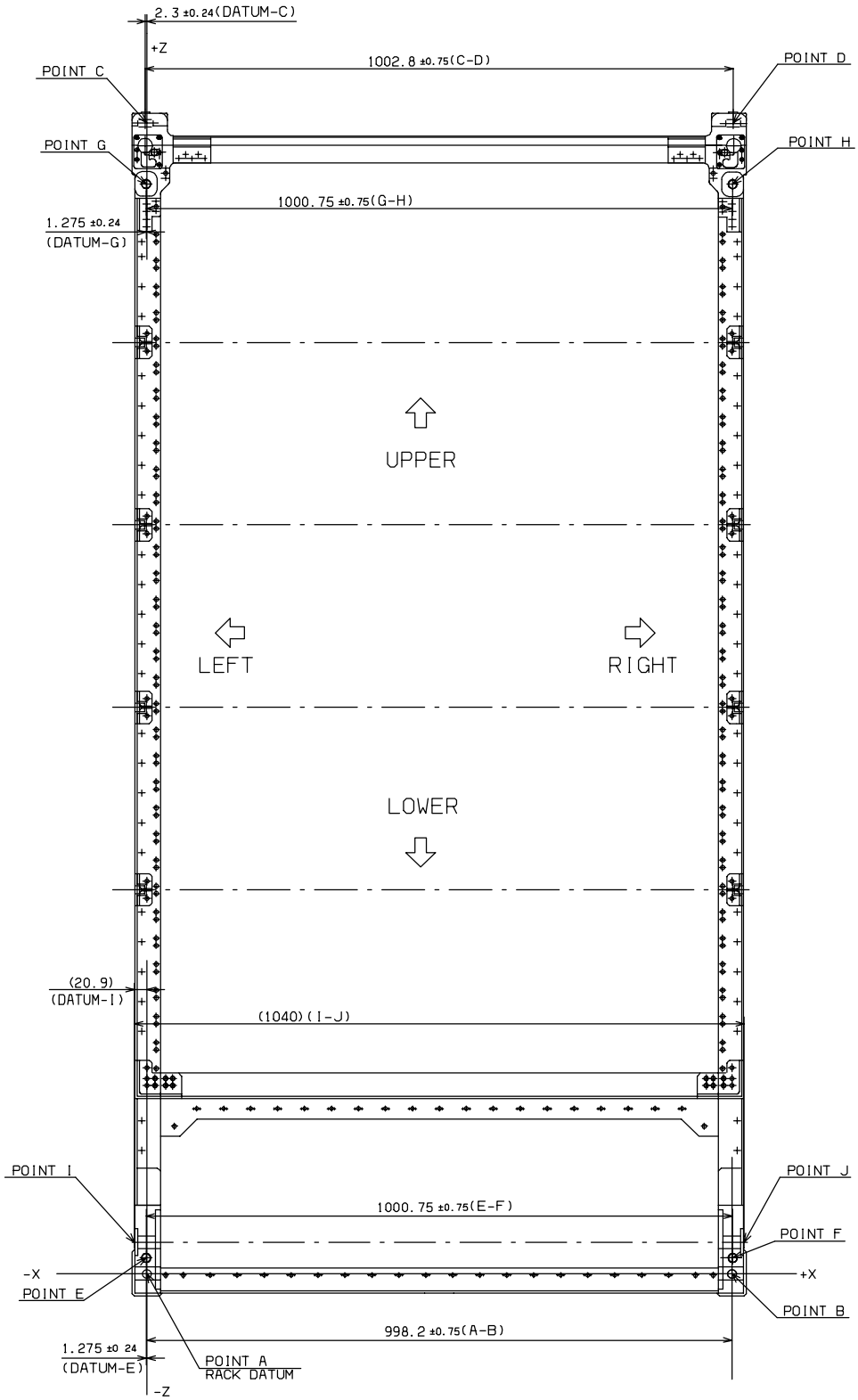

FIGURE 5.1.1–1, NASDA FOUR–POST ISPR RACK ASSY I/F DIMENSIONS

DaimlerChrysler Aerospace, Bremen – All Rights Reserved – Copyright per DIN 34

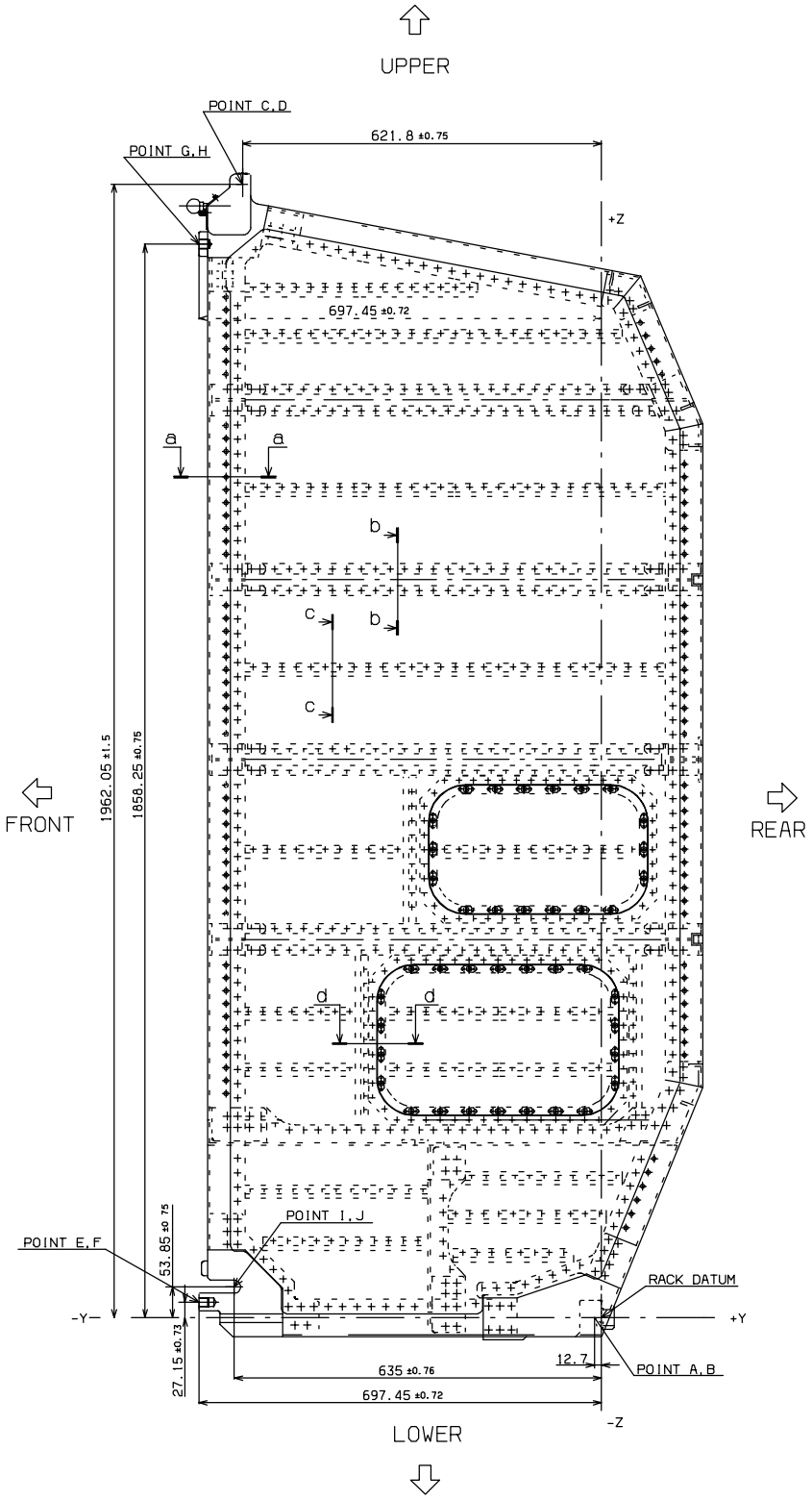

FIGURE 5.1.1–2, NASDA FOUR–POST ISPR RACK ASSY I/F DIMENSIONS

DaimlerChrysler Aerospace, Bremen – All Rights Reserved – Copyright per DIN 34

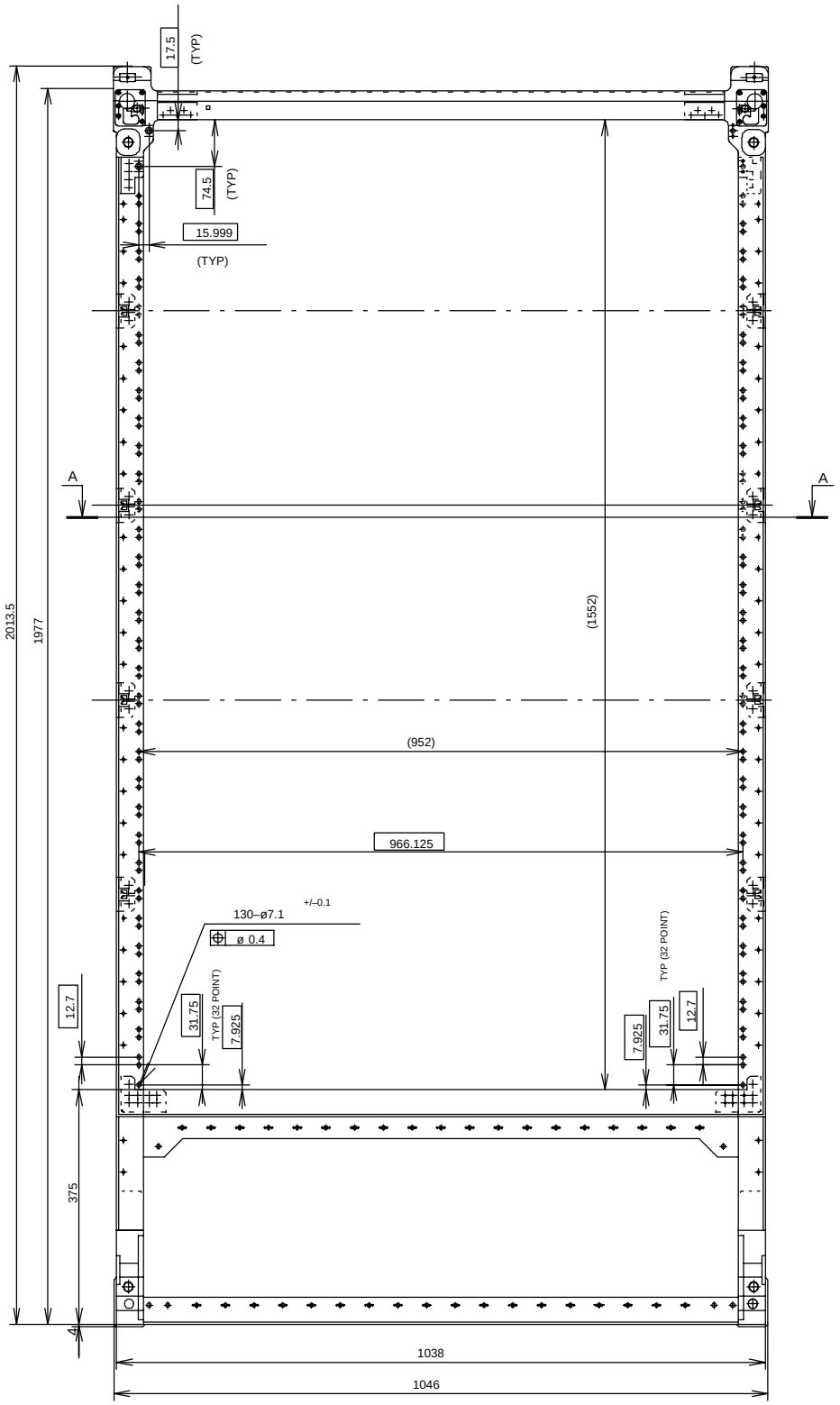

FIGURE 5.1.1–3 NASDA FOUR–POST ISPR RACK ASSY I/F DIMENSIONS

DaimlerChrysler Aerospace, Bremen – All Rights Reserved – Copyright per DIN 34

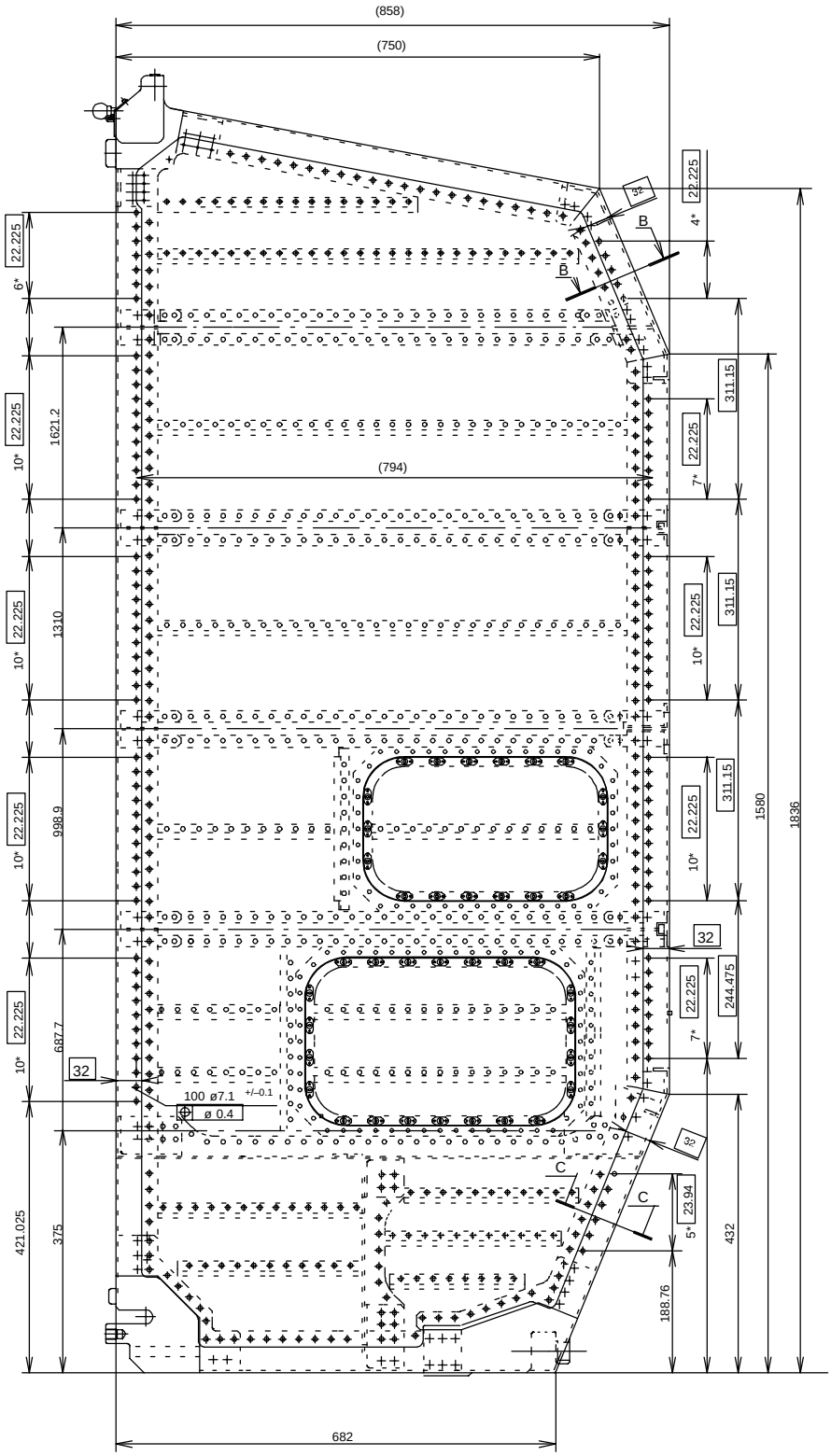

FIGURE 5.1.1–4 NASDA FOUR–POST ISPR RACK ASSY I/F DIMENSIONS

DaimlerChrysler Aerospace, Bremen – All Rights Reserved – Copyright per DIN 34

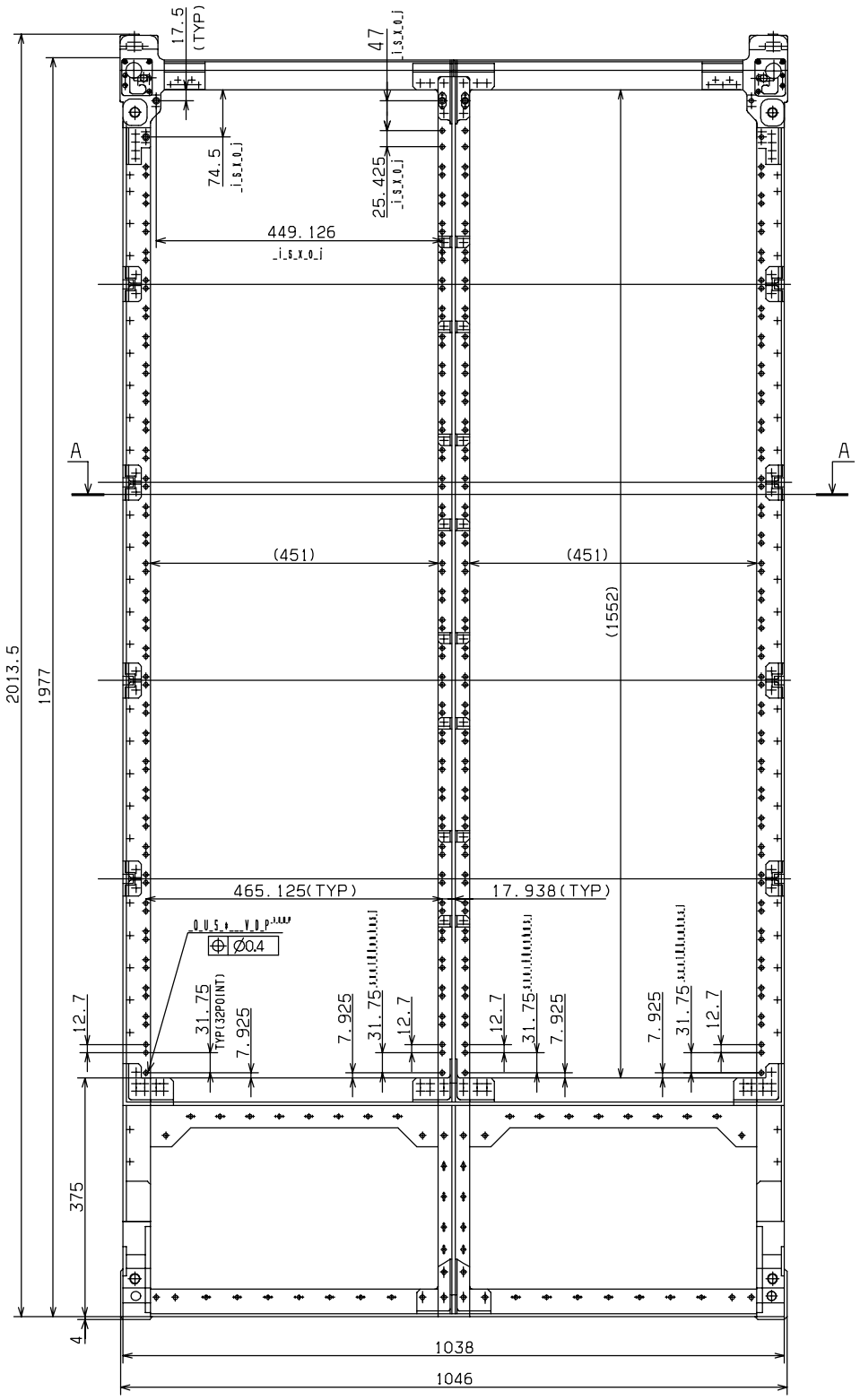

FIGURE 5.1.1–5 NASDA SIX–POST ISPR RACK ASSY I/F DIMENSIONS

DaimlerChrysler Aerospace, Bremen – All Rights Reserved – Copyright per DIN 34

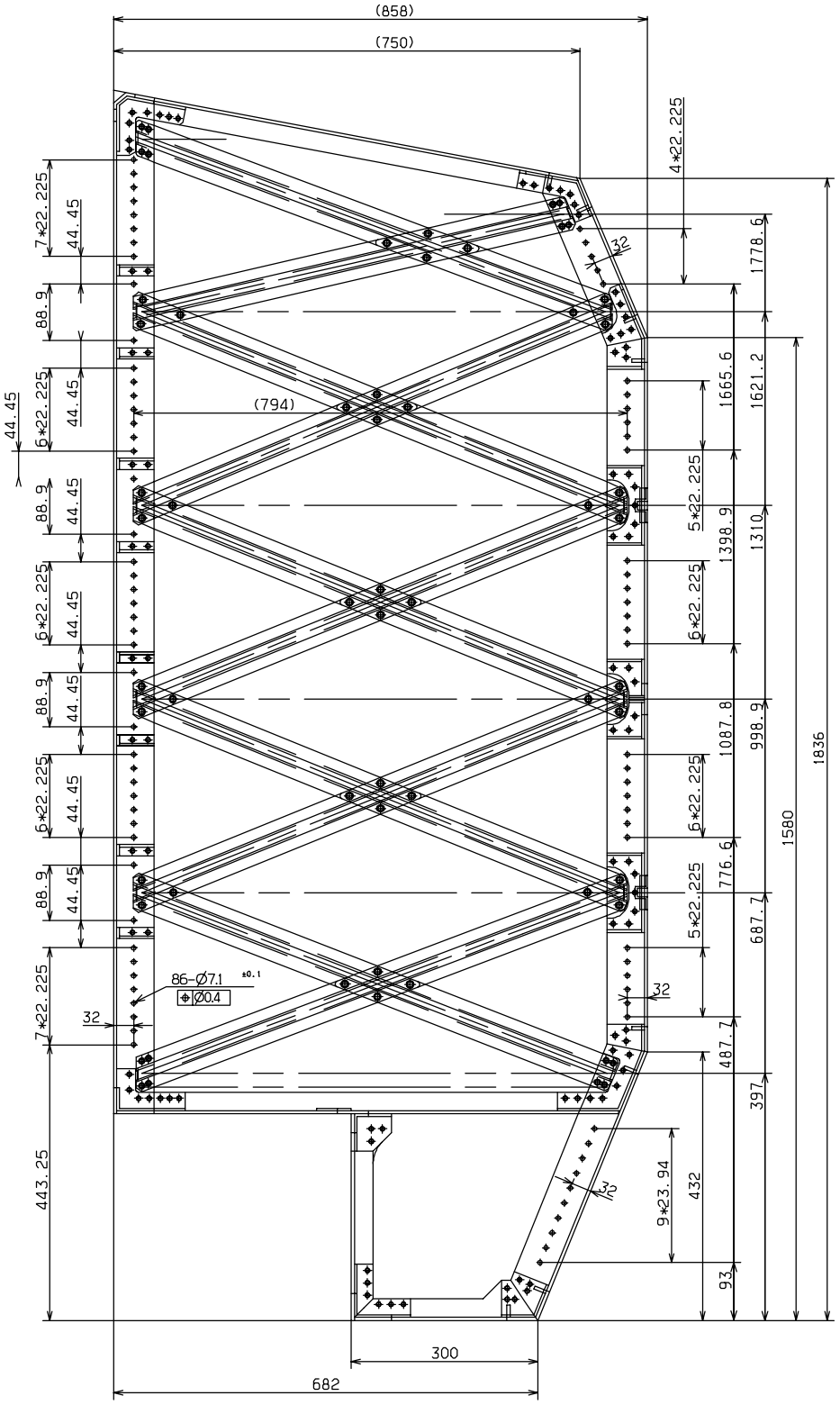

FIGURE 5.1.1–6 NASDA SIX–POST ISPR RACK ASSY I/F DIMENSIONS

DaimlerChrysler Aerospace, Bremen – All Rights Reserved – Copyright per DIN 34

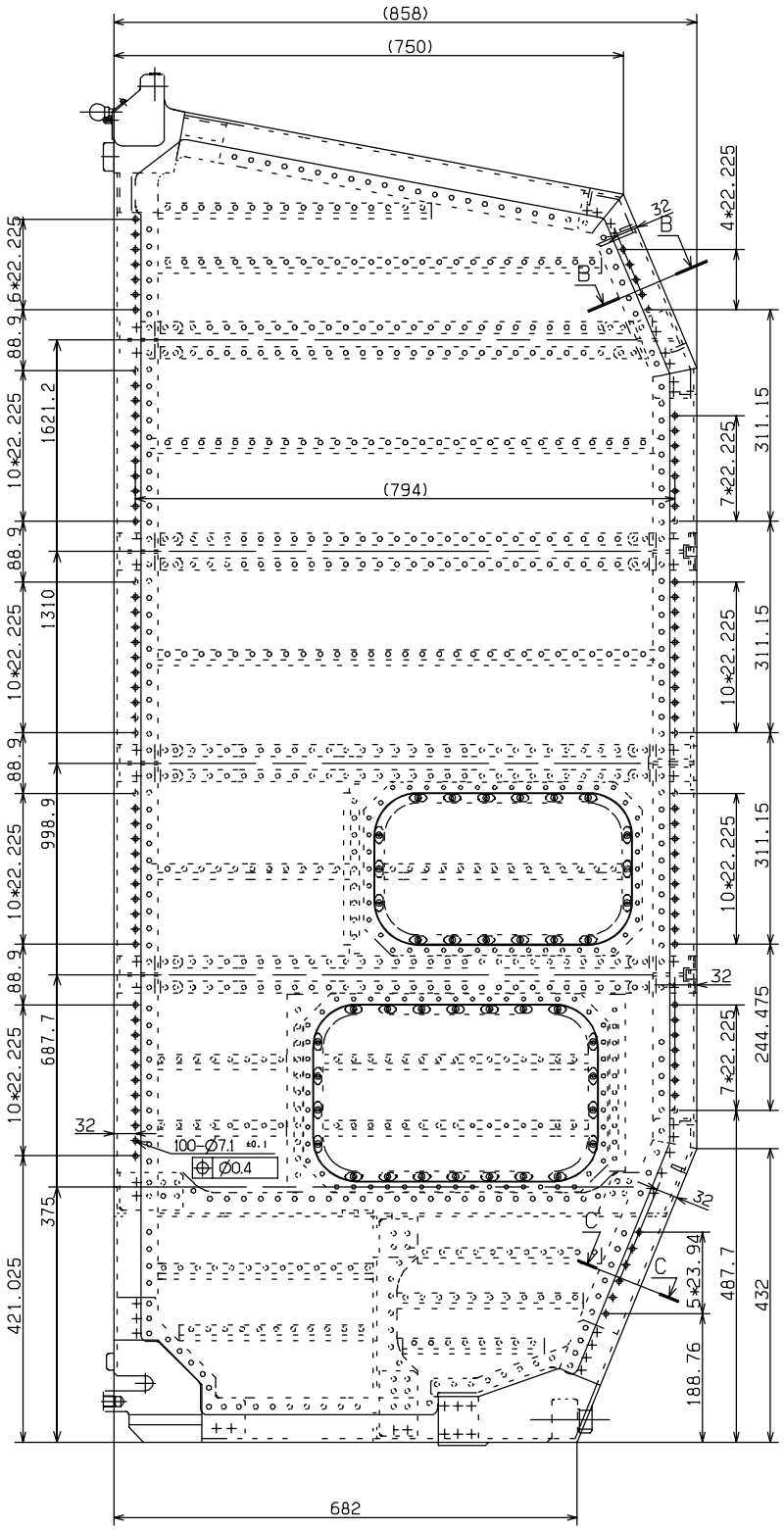

FIGURE 5.1.1–7 NASDA SIX–POST ISPR RACK ASSY I/F DIMENSIONS

DaimlerChrysler Aerospace, Bremen – All Rights Reserved – Copyright per DIN 34

The front posts of the rack must be equipped with seat tracks (Figure 5.1.1–8, ISPR Seat Track Interface) for restraints and mobility aids hardware.

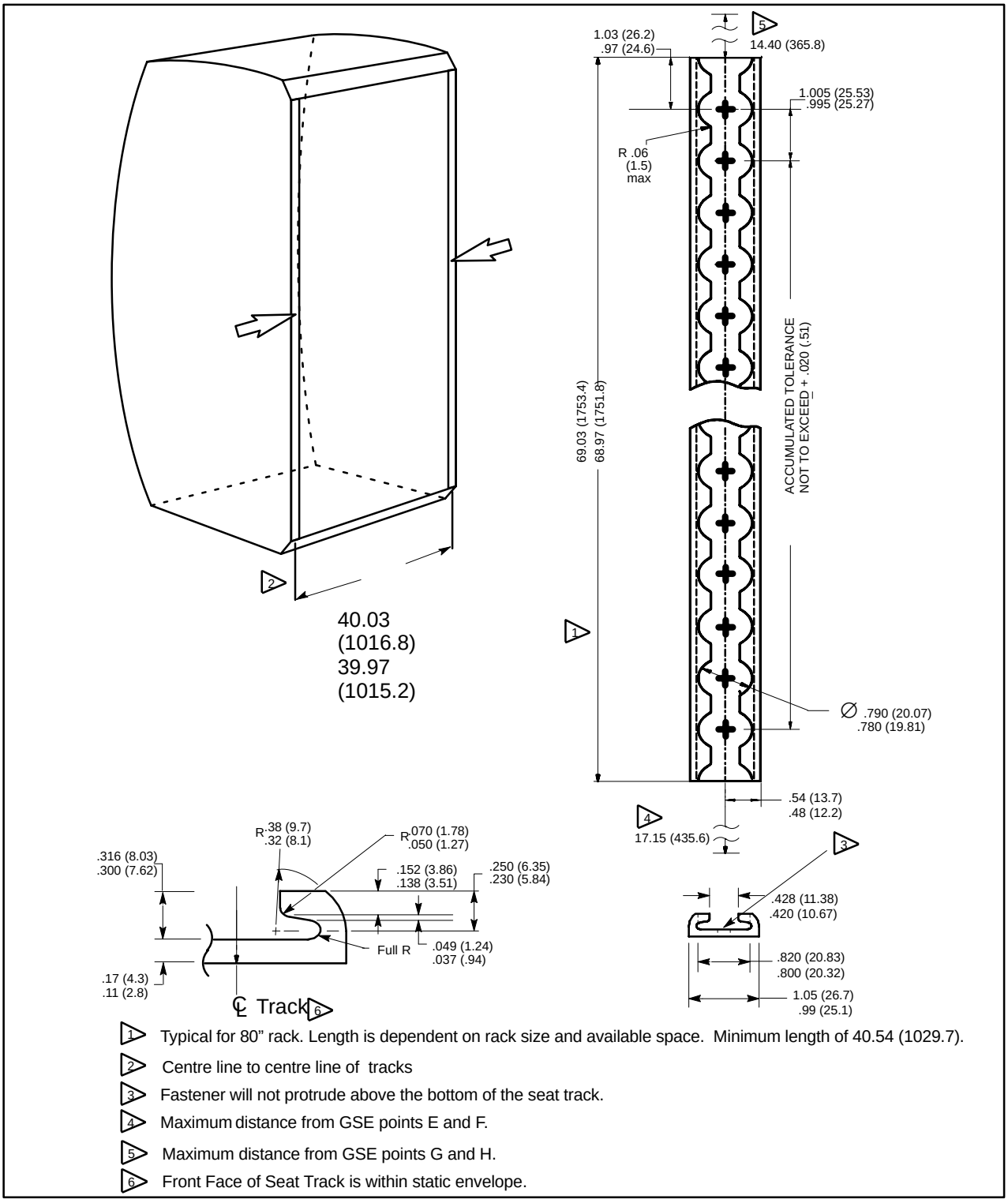

1. Typical for 80” rack. Length is dependent on rack size and available space. Minimum length of 40.54 (1029.7).
2. Centre line to centre line of tracks
3. Fastener will not protrude above the bottom of the seat track.
4. Maximum distance from GSE points E and F.
5. Maximum distance from GSE points G and H.
6. Front Face of Seat Track is within static envelope.

FIGURE 5.1.1–8 ISPR SEAT TRACK INTERFACE

DaimlerChrysler Aerospace, Bremen – All Rights Reserved – Copyright per DIN 34

The NASDA ISPR accommodates no inter–rack connectivity between adjacent racks.

Payload ISPRs connect to the APM interface at the utility interface panel (see Figure 5.1.1–9, Utility Interface Panel Connector Locations). This panel is part of the module standoff at each ISPR location.

During on–orbit rack installation, removal and transport the utilities need to be stowed and protected (responsibility of payload developer).

DaimlerChrysler Aerospace, Bremen – All Rights Reserved – Copyright per DIN 34

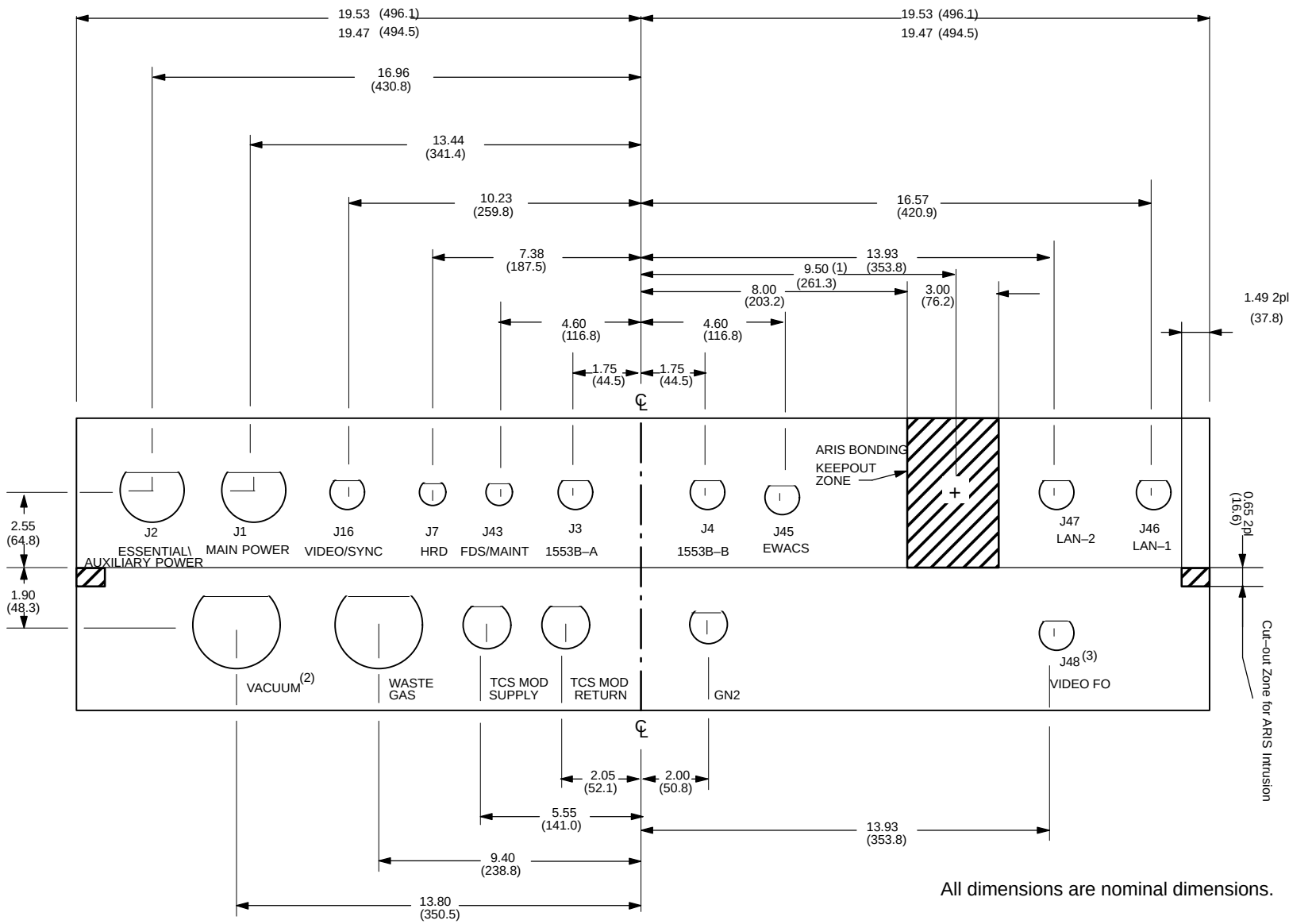

All dimensions are nominal dimensions.

1) Receptacle P/N 991R2–1BP to be installed at location shown.
2) N/A for rack O1 and rack O2.
3) Connector J48 VIDEO FO is present in Rack A4 ONLY.

FIGURE 5.1.1–9 UTILITY INTERFACE PANEL CONNECTOR LOCATIONS

DaimlerChrysler Aerospace, Bremen – All Rights Reserved – Copyright per DIN 34

5.1.1.1 ISPR MASS CARRYING CAPABILITY FOR INITIAL APM PAYLOAD

Due to the structural capabilities of the APM at the ISPR attachment interfaces, the maximum overall mass of an integrated ISPR intended for launch inside the APM is 500 kg. This mass includes all payload equipment and the rack structure itself.

5.1.1.2 ATTACHMENT POINTS

Attachment points are provided for the integrated rack. These points are used to attach the rack either to the APM during lift–off and landing, to the APM primary structure and to the ground support equipment during ground operations such as storage and transportation. The attachment points are shown in figure 5.1.1.2–1, ISPR Attachment Points.

DaimlerChrysler Aerospace, Bremen – All Rights Reserved – Copyright per DIN 34

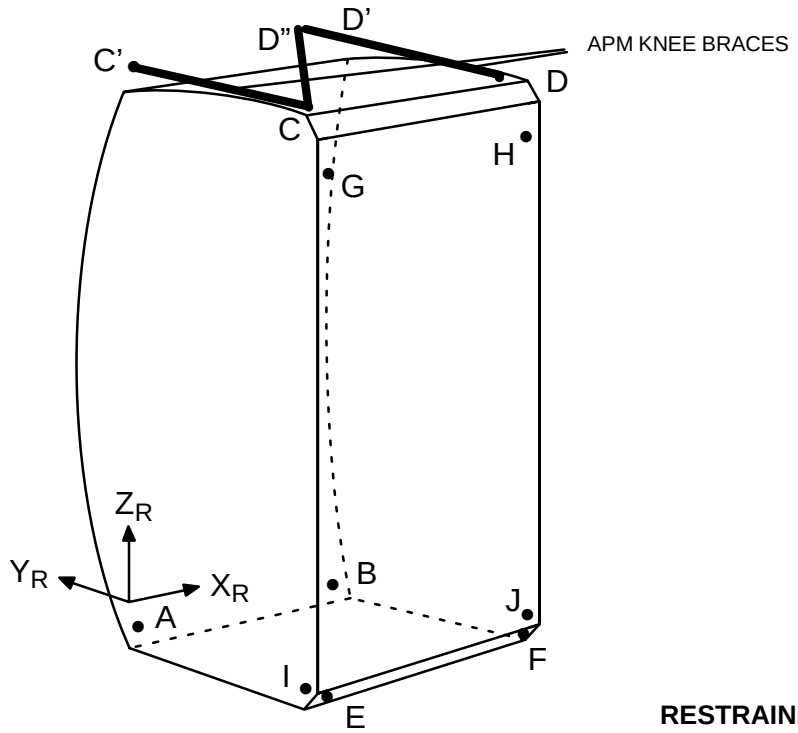

POINT	NAME	PHASE	RESTRAINED DOF X	Y	Z
A	Rack Lower Rear Attachment	Launch/Landing	Y	Y	Y
B	Rack Lower Rear Attachment	Launch/Landing	N	Y	Y
C	Rack Upper Attachment	Launch/Landing/On orbit	Y	Y	N
D	Rack Upper Attachment	Launch/Landing/On orbit	N	Y	N
E	Rack Lower GSE Attachment	Ground Handling	Y	Y	Y
F	Rack Lower GSE Attachment	Ground Handling	Y	Y	Y
G	Rack Upper GSE Attachment	Ground Handling	Y	Y	Y
H	Rack Upper GSE Attachment	Ground Handling	Y	Y	Y
I	Rack Pivot Attachment	On orbit	Y/N (*)	Y	Y
J	Rack Pivot Attachment	On orbit	Y/N (*)	Y	Y
C'	Longeron Attachment	Launch/Landing/On orbit	Y	Y	Y
D"	Longeron Attachment	Launch/Landing/On orbit	Y	Y	Y
D'	Longeron Attachment	Launch/Landing/On orbit	Y	Y	Y

Y: Degree of Freedom (DOF) restrained

N: Degree of Freedom (DOF) not restrained

*) : The reaction occurs on this point according to the load direction: when the load is applied to point i, point j is unloaded or vice versa

X_R Y_R Z_R Rack Coordinate System

FIGURE 5.1.1.2–1 ISPR ATTACHMENT POINTS

DaimlerChrysler Aerospace, Bremen – All Rights Reserved – Copyright per DIN 34

5.1.1.2.1 LAUNCH/ LANDING ATTACHMENT MECHANISM

During launch and on the ground the ISPR is attached to the module structure by means of :

- a brace assembly
  The so–called Knee brace assembly, located at the top, includes the braces themselves, plus two brace rack attachments at the rack/brace interface (top front corners of the rack). These attachments include the manually operated attachment release devices.
  The Knee–brace assembly will be furnished in the frame of the payload complement integration process by ESA. However the mass of the assembly will be charged to the integrated ISPR.
- Lower rear attachment mechanisms
  These consist of two mechanisms at the lower rear corners of the rack and a locking/release linkage system which allows the lower attachment mechanisms to be activated/deactivated by the crew. They are used when the integrated rack is loaded in the APM or the MPLM when they are launched.

5.1.1.2.2 ON–ORBIT ATTACHMENT

On orbit interface loads are the static and dynamic loads transmitted from the integrated rack to the module through the attachment points C, D, I, and J. In order to transfer on–orbit loads, the ISPR is attached to the module structure by means of a mechanism called K–bar. It connects the upper rack front attachment with a bracket mounted at the stand–off. The K–bar will be installed on orbit and its interfaces are compatible with the knee–brace.
Additionally the ISPR is attached to the module via the pivot point attachment at the rack front bottom. The pivot points also permit the entire rack to be rotated about the pivot point near its bottom front edge to allow access to the APM shell and the interior of the rack through access panels.

5.1.1.2.3 GSE ATTACHMENT POINTS

Interface loads for ground handling are the static and dynamic loads transmitted from the rack to the Mechanical Ground Support Equipment (MGSE) through the attach points E, F, G, and H. The GSE attachment points are used during ground transportation, storage, and at other times when the rack is not mounted in either the APM.

Figure 5.1.1.2.3–1, Ground Handling Mechanical Attachment Points, shows the GSE attachment points.

DaimlerChrysler Aerospace, Bremen – All Rights Reserved – Copyright per DIN 34

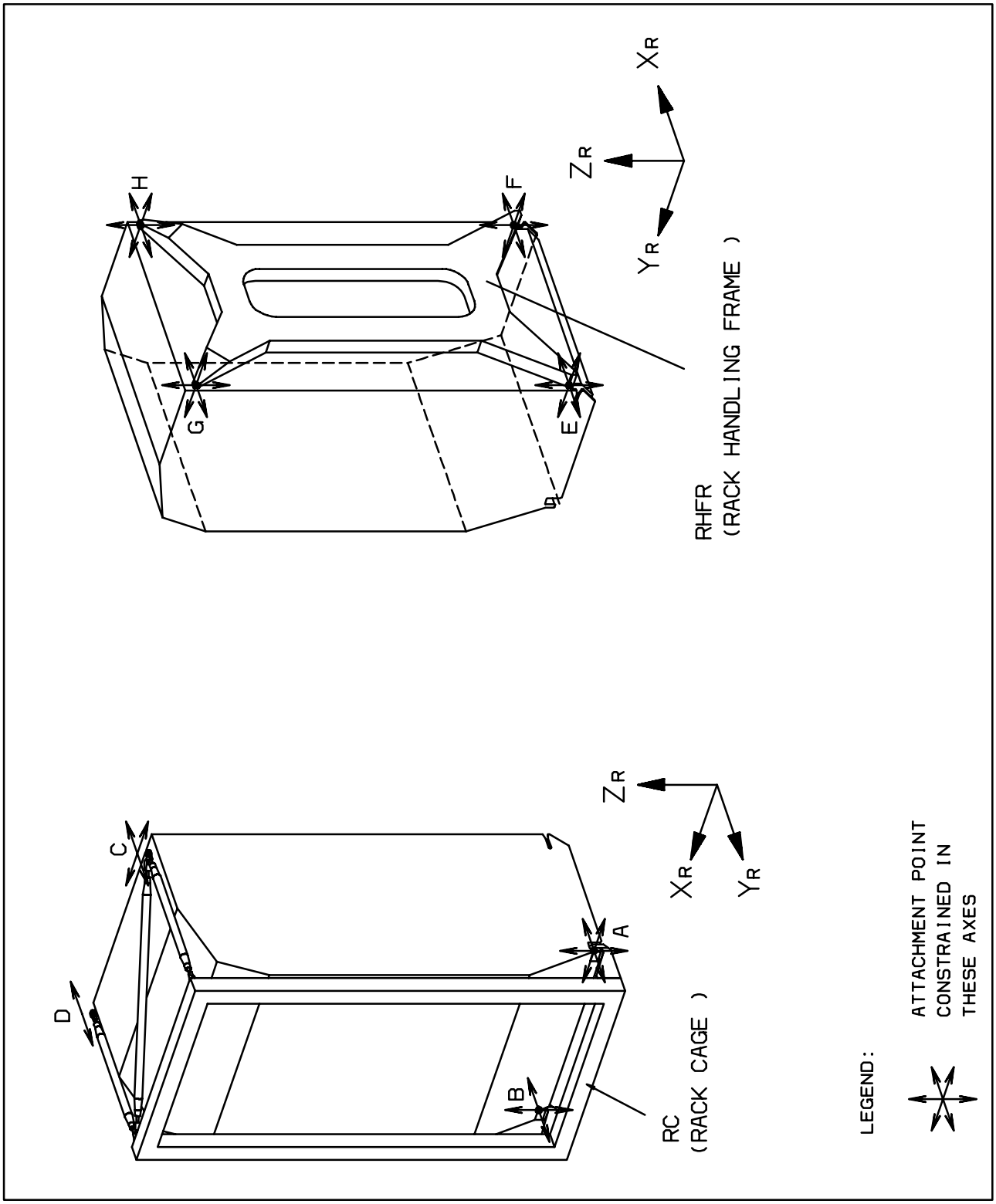

FIGURE 5.1.1.2.3–1 GROUND HANDLING MECHANICAL ATTACHMENT POINTS

DaimlerChrysler Aerospace, Bremen – All Rights Reserved – Copyright per DIN 34

5.1.1.3 FRONT PANEL PROVISIONS

Each payload rack has to accommodate on the rack front side the following items:

- a rack power maintenance switch
- a smoke indicator LED
- an inlet port for the Portable Fire Extinguisher (PFE).

The items have to be compatible with the UIP and front panel interfaces.

5.1.1.4 PARTITIONS

The APM system provides on–orbit soft partitions to maintain the cabin volume when up to 8 ISPRs are missing. The partitions isolate the habitable area from the APM shell. They can be installed by the crew in any position where an ISPR is missing.
Seat tracks are attached to the soft partitions. The partitions themselves will be attached with velcro (TBC) to the stand–offs.

5.1.2 ATTACHMENT PROVISIONS FOR CENTRE AISLE EQUIPMENT

Payloads may be accommodated in the centre aisle volume as identified in Figure 4.1.2–2, Centre Aisle Volume Provisions for Payloads.

5.1.2.1 SEAT TRACK MOUNTING PROVISIONS ON DECK RACK POST

The dimensions of the centre aisle seat tracks mounted to the deck rack post are shown in Figure 5.1.2.1–1, Mounting Provisions on Deck Rack Post.

DaimlerChrysler Aerospace, Bremen – All Rights Reserved – Copyright per DIN 34

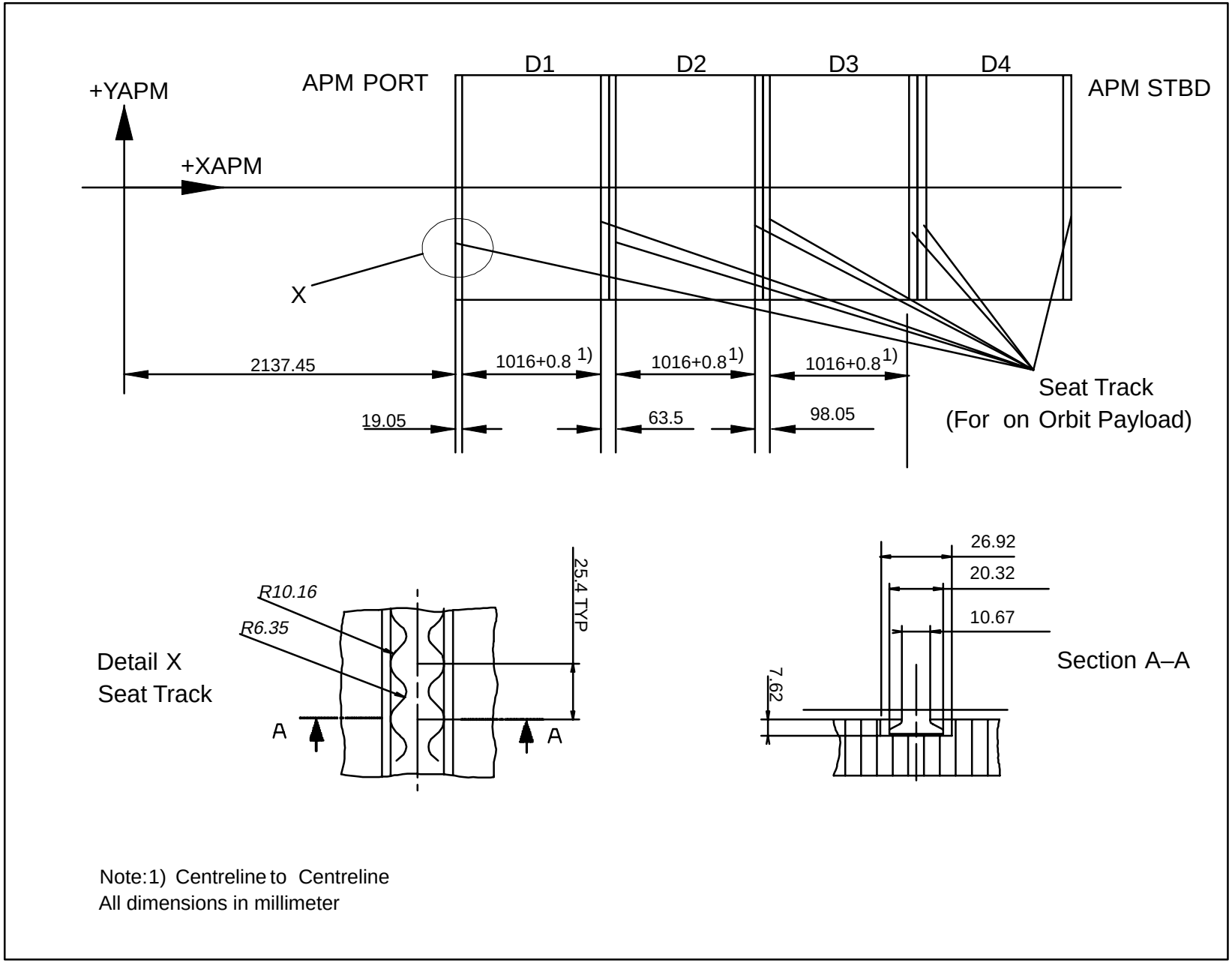

FIGURE 5.1.2.1–1 MOUNTING PROVISIONS ON DECK RACK POST

DaimlerChrysler Aerospace, Bremen – All Rights Reserved – Copyright per DIN 34

5.1.3 EXTERNAL PAYLOAD ADAPTERS

TBD

DaimlerChrysler Aerospace, Bremen – All Rights Reserved – Copyright per DIN 34

5.2 PAYLOAD THERMAL CONTROL AND HEAT REMOVAL

5.2.1 APM INTERNAL THERMAL CONTROL AND HEAT REMOVAL

All internal payload generated heat loads are finally collected by the APM water loop, which consists of:

- a Moderate Temperature water Section (MTS) for payload cooling in ISPR's and for subsystem cooling using ColdPlates (CP)
- a Low Temperature water Section (LTS) for the Condensing Heat Exchanger(CHX).

The water loop transfers the heat collected by the MTS and LTS to the Moderate Temperature Heat Exchanger (MTHX) and the Low Temperature Heat Exchanger (LTHX), accordingly. Both heat exchangers are located outside the APM on the adjacent space station node.

The functional diagram in Figure 5.2.1–1, Functional Schematic of Water Cooling Loop, shows the loop and the distribution system. The two water pumps are connected in parallel with one pump being activated and the other being cold redundant.

The moderate temperature water branch manages the thermohydraulic operation of payload racks and APM subsystem cold plates. The payload racks and subsystem cold plates are arranged in a parallel configuration to provide common conditions of temperature and pressure.
The water flow circulation is provided by the Water Pump Assembly (WPA) (one active and the other parallel for redundancy). The WPA maintains the pressure drop across the plenum and provides the loop pressurization during all operational phases by using an active accumulator connected to the nitrogen supply line. Additional functions performed by the WPA are water filtration and gas trapping.

DaimlerChrysler Aerospace, Bremen – All Rights Reserved – Copyright per DIN 34

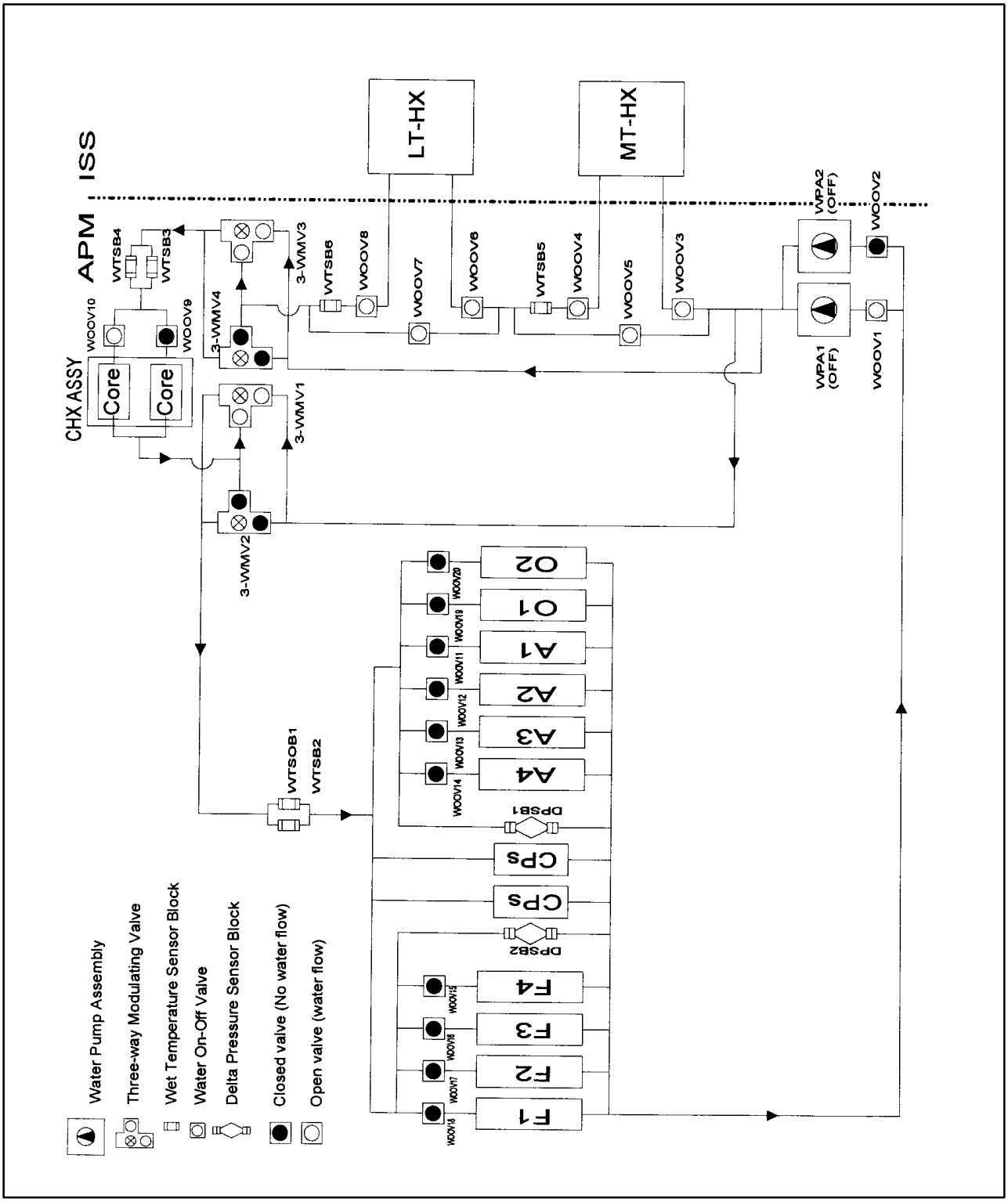

FIGURE 5.2.1–1 FUNCTIONAL SCHEMATIC OF WATER COOLING LOOPS

5.2.1.1 MODERATE TEMPERATURE SECTION

DaimlerChrysler Aerospace, Bremen – All Rights Reserved – Copyright per DIN 34

All lateral payload racks, as well as the subsystem–dedicated coldplate branches, are arranged in a parallel flow configuration, thus providing almost equal pressure drops for each rack and similar cooling inlet conditions for the payloads in all the racks.

5.2.1.1.1 MODERATE TEMPERATURE SECTION HEAT REJECTION CAPABILITY

The moderate temperature water section can accept a maximum payload generated waste heat of 14.5 kW.

The total allowable heat dissipation relates to the 13.5 kW of electrical power provided plus 1.0 kW of metabolic or exothermal heat apportioned to payloads. However, if less electrical power is consumed, metabolic/ exothermal heat loads may be increased on a scheduled base.

5.2.1.1.2 MODERATE TEMPERATURE SECTION INLET/ OUTLET TEMPERATURES AT THE ISPR INTERFACE

The MTS has an operating temperature range from 16 °C to 49 °C. The temperature in the supply line to the racks and cold plates is controlled between 16 °C and 20 °C (unselectable) by a three–way modulating valve controlling the bypass.

5.2.1.1.3 MODERATE TEMPERATURE SECTION MASS FLOW RATE

A maximum of 650 kg/h is allocated to all ISPRs. The dedicated mass flow rates per ISPR have to be assessed by the rack integrator as per paragraph 5.2.1.1.4.
Each ISPR inlet line is equipped with a modulation valve at the system side to establish a dedicated water flow. Supply and return lines are equipped with quick disconnects.

The APM provides, by means of remote controlled valves, the capability to select lower flow rates than the actual calibrated flow rate. This capability will be used to optimize the flow configuration on payload complement level and to adapt significant changes in the dissipation profile of the individual integrated racks. The flow configuration will be re–configured either by APM timeline commands, APM–CC commands or commands from the APM PCS. The acceptable number of re–configuration cycles is defined in the Pressurzed Payload Interface Requirements Document .

There will be no closed loop control of the system modulation valves to be performed by payloads.

Flow rate modulation within an ISPR is allowed with the constraints defined in the Pressurzed Payload Interface Requirements Document when this is required.

5.2.1.1.4 COOLANT FLOW RATE

The coolant flow rate will be specifically calibrated for each ISPR. The flow rate working points will be selected by the payload developer according to the thermal control needs. The flow rate will be in the range of 30 kg/h to a maximum value of 190 kg/h, for both 6 kW and 3 kW power racks.

DaimlerChrysler Aerospace, Bremen – All Rights Reserved – Copyright per DIN 34

The system flow control capability for the ISPR flow rate maintains the mass flow within the following limits:

- ISPR selected calibration flow rate ± 10 % (at full calibration flow; for lower flows the accuracy will be TBD)

The ISPR integrator will select the ISPR design flowrate (m_d'), ranging between 30 kg/h and 190 kg/h according to the ISPR dissipated power (W), to the specified cooling fluid thermal conditions, and the relationship:

- $W = m_d' \cdot c_p \cdot (T_o - T_i)$, where T_o is the water outlet temperature (max. 49 °C) and T_i is the water inlet temperature controlled between 16 °C and 20 °C.

In the selection of T_o, the ISPR integrator will consider:

- its own thermal design requirements
- the uncertainty in the system flow control capabilities
- for calibration of the mass flow rate, the differential water temperature shall be 20 °C minimum, for integrated racks dissipating more than 1 kW.

A single ISPR is likely to vary its dissipated power according to the specific experiment timeline. A “rigid” calibration scheme, where flowrate is selected based on the maximum power dissipated during the complete payload lifetime is likely to generate accommodation issues. In fact, when the ISPR dissipated power will be lower than maximum used for flowrate calibration, T_o will automatically decrease, the flowrate being fixed. In order to overcome this problem, payloads or facilities showing significant power variations during their lifetime will choose a calibration scheme where flowrate can be varied “stepwise” according to the dissipated power, when a reconfiguration occurs. The number of reconfigurations will be tracked by mission control.

The integrated rack shall not consider any control interaction between the APM provided flow rate selectetivity and rack internal flow control or temperature control systems. Integrated racks containing rack internal automated flow control systems shall meet the requirements specified in the Pressurized Payloads Interface Requirements Document.

5.2.1.1.5 LOCAL DISCONNECTION

Reconfiguration of “non operating” ISPRs will be performed closing the dedicated system on–off valve prior to each ISPR, and subsequently disconnecting quick–disconnects. In order to induce the minimum disturbance compatible with the cooling fluid flow control law, only one ISPR reconfiguration at a time will be foreseen during mission reconfiguration or maintenance procedures.

DaimlerChrysler Aerospace, Bremen – All Rights Reserved – Copyright per DIN 34

5.2.1.2 CABIN LOOP PAYLOAD HEAT REJECTION CAPABILITY

The APM thermal design approach foresees that ISPRs reject internally generated heat through the dedicated active thermal loop to the maximum possible extent. In any case, the cabin loop is designed for the accommodation of limited heat leaks from ISPRs.
The cabin loop allows the injection of up to 500 W payload equipment heat load simultaneously with the metabolic heat load of three crew members. This heat load is transferred via the CHX to the LTS. The cabin loop heat rejection capability can be any combination of heat flux from rack front panels or payload centre aisle equipment.
It is the payload mission integrator responsibility to allocate the total budget of 500W to the different cabin loop payloads, which may change from mission increment to increment. In addition a reallocation can be performed during a mission depending on the payload operation sequence.

The maximum cabin loop heat rejection capability for payloads can be any combination of dissipation from ISPR front sides, centre aisle mounted equipments and metabolic heat. However the specified total heat dissipation of all ISPRs of 500 W must not be exceeded when the cabin air temperature is at 18 °C. When the crew is not present, this value could be exceeded, re–allocating the crew equivalent dissipation to the payloads.

The maximum latent heat that can be removed by the cabin loop, including a crew of 3 persons, ranges between 150 W at 18 °C average cabin air temperature and 290 W at 27 °C average cabin air temperature.

In general, the latent heat must not exceed 70 W for the entire APM module. When a reduced crew or no crew is present, part of the relevant latent heat load could be allocated to payloads.

The ISPR heat leaks to the module and the ISPR temperature field have to be determined using the boundary conditions specified. Radiation fluxes between ISPRs and between ISPR and APM shell, will be minimized by proper ISPR thermal design measures, e.g. low emissivity surface finish. Convection fluxes will be negligible on all ISPR surfaces, except the front panel. Conduction fluxes via mechanical interfaces will be minimized by proper ISPR thermal design measures (decoupling).

Considering the specified boundary conditions, the resulting sensible heat leak ranges between 15 and 35 W for a single ISPR, in line with the mean radiant temperature of 35 °C and average cabin air temperatures of 27 °C and 18 °C respectively.

5.2.1.2.1 INTEGRATED RACKS THERMAL ANALYSIS

The thermal design responsibility of the APM system ends at the moderate temperature connector interface of the ISPR and at the specified ISPR front side / wall thermal boundaries. The payload developer is responsible for the thermal design of his facility or payload drawer.

DaimlerChrysler Aerospace, Bremen – All Rights Reserved – Copyright per DIN 34

The payload mission integrator will perform a system thermal analysis to demonstrate that the APM system capabilities and the individual payload requirements are met.

5.2.1.3 AIR COOLING

Although payload heat removal by water cooling is normally very efficient, there might be design solutions where forced air cooling is the preferred approach for the payload developer.

The payload developer has to take into consideration that centre aisle mounted payload equipment has to be designed for autonomous air cooling and/or radiative cooling as necessary to comply with the temperature requirements.

Air cooling heat removal capability can be achieved with a payload provided air cooling fan assembly associated with a heat exchanger which transfers the heat load into the rack water loop. Depending on the actual heat load, forced air cooling can be combined within ISPRs with the smoke detection sensor airflow.

5.2.1.4 CENTRE AISLE PAYLOADS

The thermal design responsibility of the APM system ends at the deck rack seat track interface. The payload developer is responsible for the thermal design of his centre aisle payload equipment.

The payload developer has to take into consideration that centre aisle mounted payload equipment has to be designed for autonomous air cooling and / or radiative cooling as necessary to comply with the temperature requirements.
A conductive interface for heat transfer shall not be considered for design purposes. No TCS water loop connection is available for centre aisle payloads.

The payload mission integrator has to perform the thermal system analysis to demonstrate that the APM system capabilities and the individual payload requirements are met.

5.2.2 APM EXTERNAL PAYLOAD FACILITY

TBD

DaimlerChrysler Aerospace, Bremen – All Rights Reserved – Copyright per DIN 34

5.3 PAYLOAD VACUUM/ VENTING FACILITY

The Vacuum & Venting (V&V) System provides the following payload dedicated capabilities using the space environment as a vacuum source:

- An evacuation capability which will guarantee “clean” (not dirty) vacuum conditions for the payload racks;
- A venting capability which will be used for the initial evacuation of the payload racks and for waste gas removal during payload activation.

The vacuum and venting facility schematic is shown in Figure 5.3–1, Functional Schematic of Vacuum and Venting Assembly. Two separate lines provide a vacuum and venting interface to each lateral payload rack position. The two payload racks in the overhead position have only a venting interface.

There is no venting and vacuum interface provided from the APM system to the centre aisle payload.

The vacuum and venting facility consists of the following assemblies:

- the vacuum line connection to space at the upper feedthrough of the starboard cone
- the vent line connection to space at the upper feedthrough of the port cone

The major constituents of the APM V&V System are:

- *Vent Line:*
  – V&V Dumping Device
  – Manual Repressurization Valve
  – Pressure sensors (four Pirani and one Rough Vacuum Pressure Sensor)
  – Ten Motorized Waste Gas Shut–Off Valves
  – Ten Payload interface Quick Disconnects with Pressure Caps
  – Ducting with flexible elements and appropriate fixations, connections.
- *Vacuum Line:*
  – V&V Dumping Device
  – Manual Repressurization Valve
  – Pressure sensors (Three Pirani and one Rough Vacuum Pressure Sensor)
  – Eight Payload interface Quick Disconnects with Pressure Caps
  – Ducting with flexible elements and appropriate fixations, connections.

Motorized isolation valves are provided on the APM system side and controlled by the APM at each ISPR venting interface in order to prevent cross–contamination of Payloads during venting.

Control valves need to be introduced by the payload developer inside the racks for the vacuum interface. It is assumed that the valves are controlled by the payload software depending on the payload process status. The valves should be motorized because the on–orbit crew availability is very limited. The valve status shall be provided to the APM system.

DaimlerChrysler Aerospace, Bremen – All Rights Reserved – Copyright per DIN 34

The Vent Line will be used at the beginning of the vacuum operation for initial evacuation of the payload chamber. Once the desired pressure level of $1.3 \cdot 10^{-3}$ mbar at the payload interface is reached, the payload will internally switch over to the vacuum loop. A rack internal high vacuum pump could further reduce the vacuum level as needed for the experiment.

It has to be highlighted that only one experiment can be vented at a time in order to prevent cross–contamination.

The Venting Line, connected with each payload rack via a Waste Gas Shut–Off Valve (WLSOV), can be evacuated/vented or closed to space by a Vacuum and Venting Dumping Device (VVDD), which is an electrically operated redundant shut–off valve, located in the Port Cone.

On the APM system side two types of pressure transducers, different for pressure range monitoring capabilities, are installed to monitor the function of the overall venting facility at the following locations:

- close to the interface to space;
- at the end of each module stand–off branch.

Pressure level is monitored in the lower operating range to provide information in support of payload operation: monitoring range is 0.1 Pa ÷ 100 Pa with an accuracy of 1 order of magnitude throughout the complete measurement range (e.g. at 0.1 Pa the accuracy is 0.01 to 1 Pa).

A manual repress valve is also installed in this line for pressure equalization with ambient cabin air (e.g.: maintenance purposes). The pressure in the line is thus monitored to control such operations with a monitoring range of 100 Pa ÷ 1100 hPa with an accuracy of ±500 Pa @ 1100 hPa.

The layout of the Venting Line is sketched in Figure 5.3–2. The layout of the Vacuum Line is sketched in Figure 5.3–3.

DaimlerChrysler Aerospace, Bremen – All Rights Reserved – Copyright per DIN 34

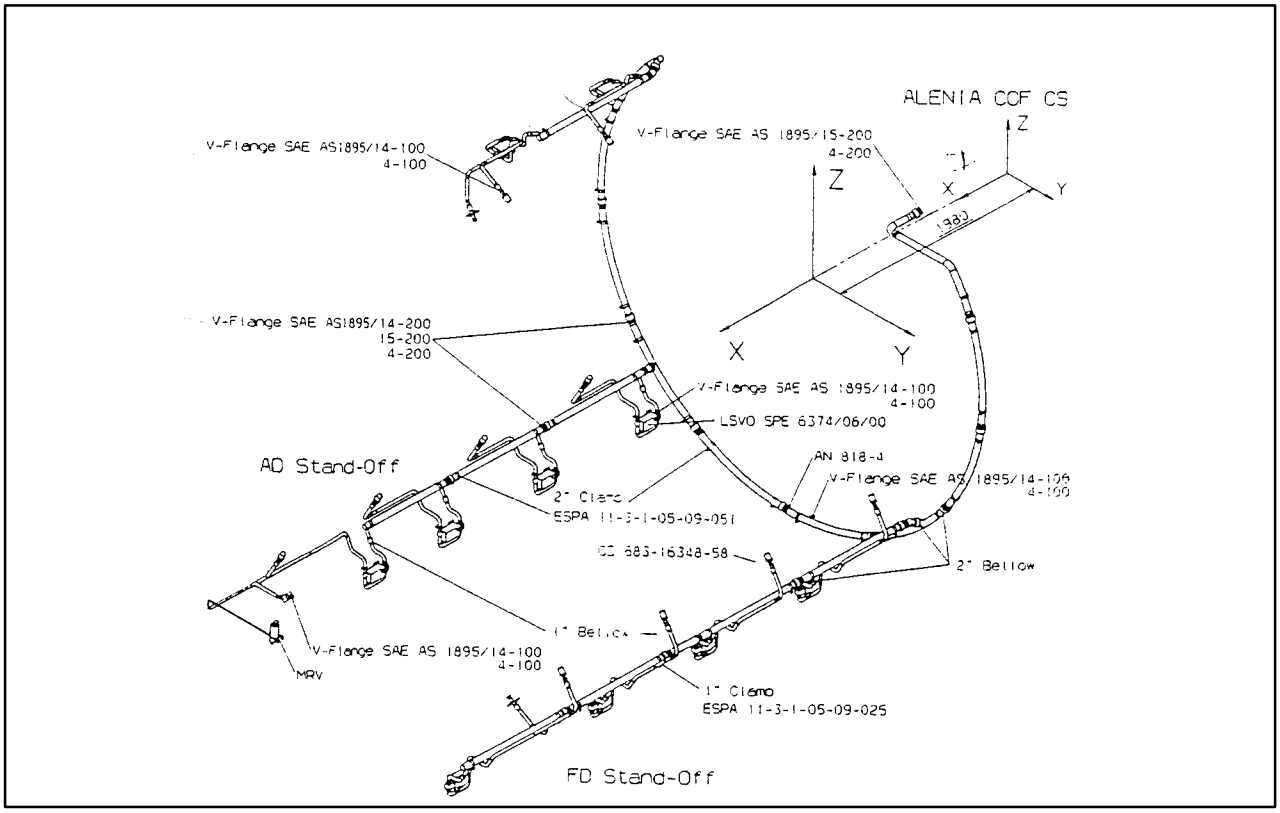

FIGURE 5.3–2 VENTING LINE LAYOUT

DaimlerChrysler Aerospace, Bremen – All Rights Reserved – Copyright per DIN 34

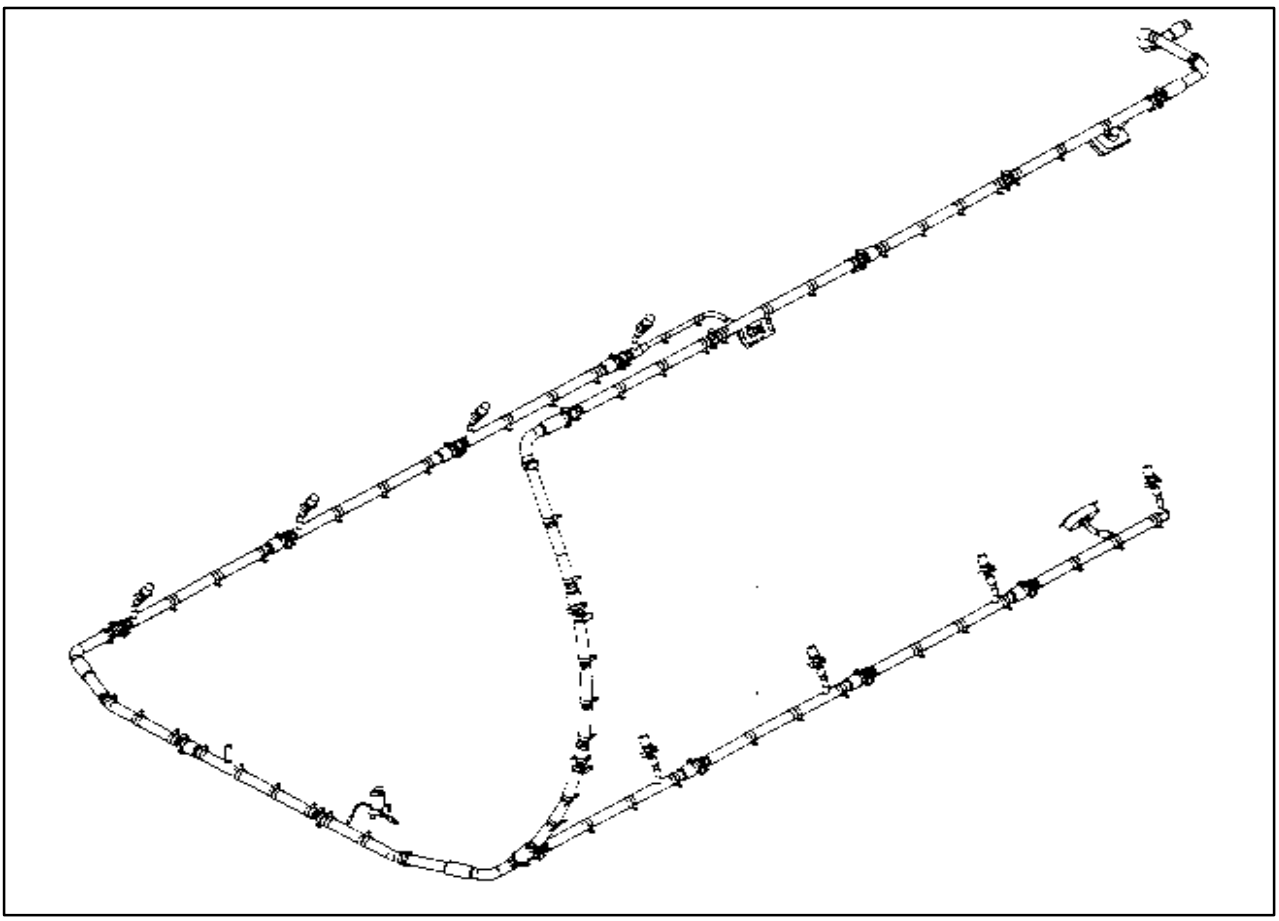

FIGURE 5.3–3 VACUUM LINE LAYOUT

DaimlerChrysler Aerospace, Bremen – All Rights Reserved – Copyright per DIN 34

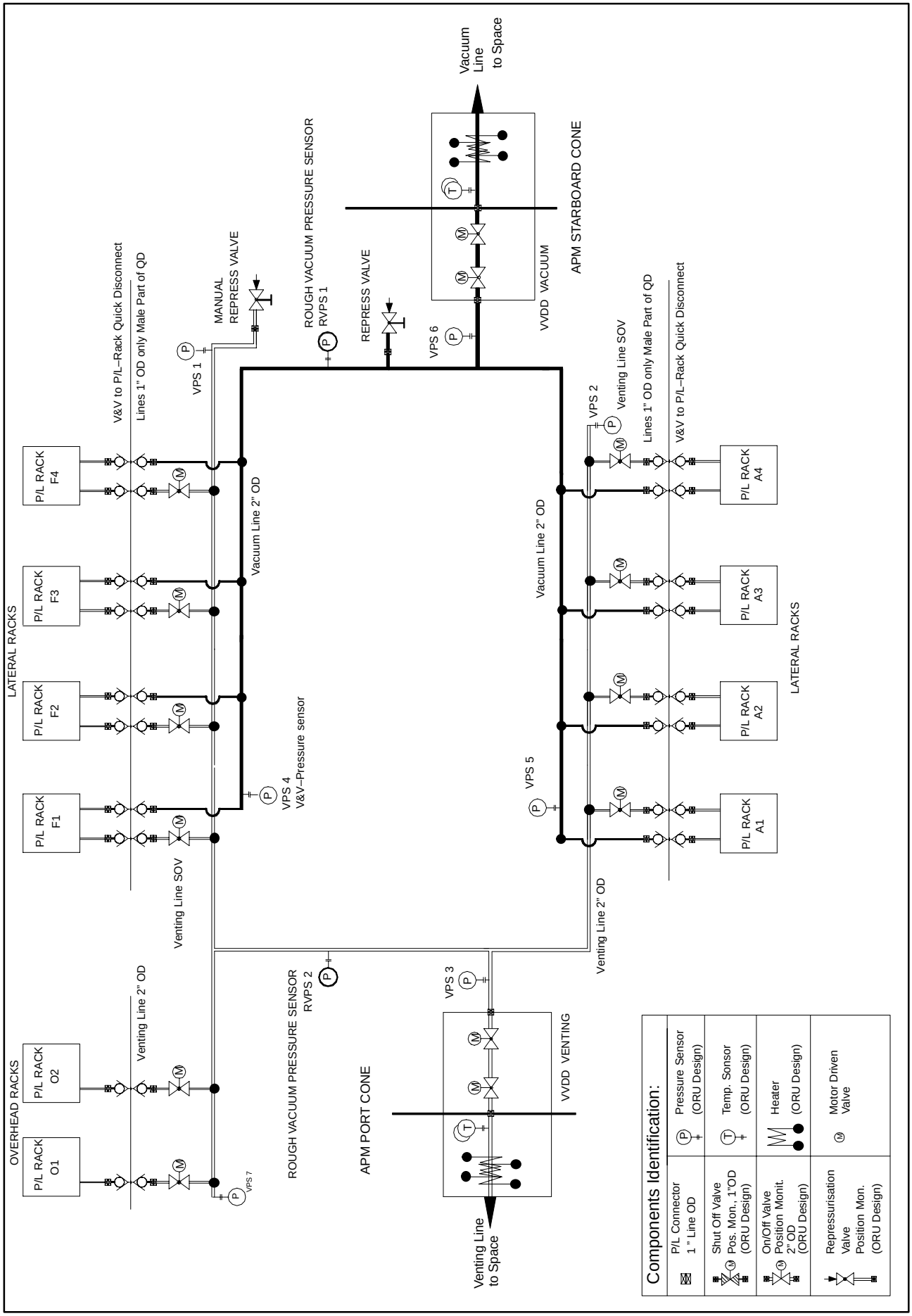

FIGURE 5.3–1 FUNCTIONAL SCHEMATIC OF APM VACUUM AND VENTING ASSEMBLY

DaimlerChrysler Aerospace, Bremen – All Rights Reserved – Copyright per DIN 34

5.3.1 PAYLOAD VENTING LINE

The payload venting line can be used for two purposes:

- to vent purge gases to space
- to vent the experiment chamber atmospheric content to achieve pre–vacuum conditions such that the vacuum line connection can be activated for this particular payload.

It has to be noted that only one experiment can be vented at a time in order to prevent cross–contamination. The corresponding restrictions on the payload timeline have to be considered by the mission integrator.

The values presented in the following assume infinite conductance, zero–leakage and zero–out/offgassing between payload chamber and rack interface.

5.3.1.1 INTERFACE PRESSURE

The APM ECLSS Venting Line (excluding QDs) provides the capability to pump down a 100 litres payload chamber, whatever its position in the line, from a pressure of ≈ 1000 hPa down to a pressure of 0.13 Pa within 2 hours, assuming infinite conductance and zero leakage and out/off–gassing between payload chamber and rack interface, starting from a completely evacuated vent line, considering dry air as a gas mixture.

In Figure 5.3.1.1–1 the payload pressure vs. time is reported, with reference to the worst case position for each branch (overhead O2 and the two lateral racks A4, F4), deriving from the longest path through which evacuation will occur. For other locations lower times can be achieved.

DaimlerChrysler Aerospace, Bremen – All Rights Reserved – Copyright per DIN 34

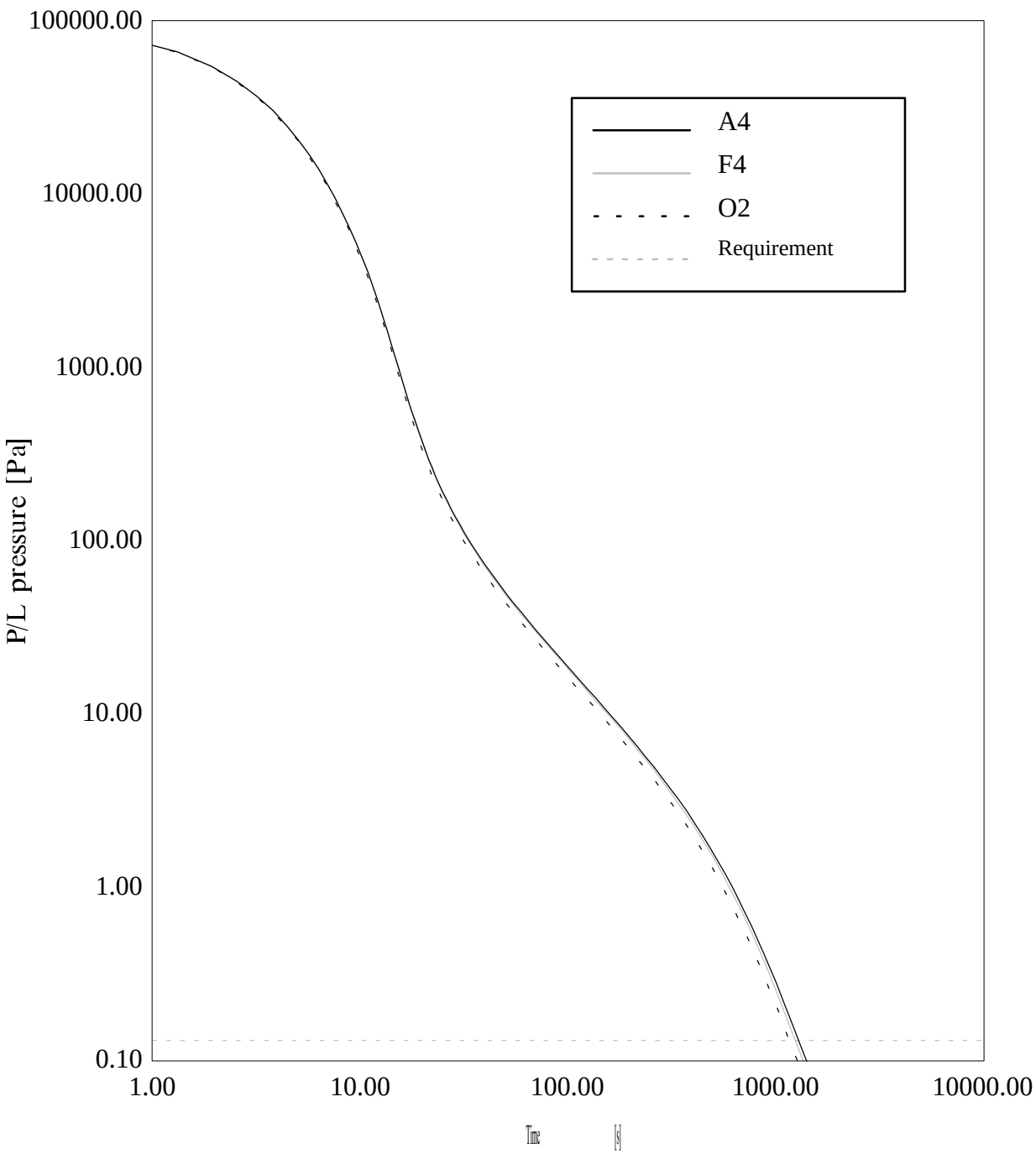

Legend: *O2 = rack in the worst Overhead branch position*
A4 = rack in the worst Aft branch position
F4 = rack in the worst Forward branch position

FIGURE 5.3.1.1–1 PAYLOAD PRESSURE VERSUS TIME FOR THE WORST LOCATION FOR EACH BRANCH

DaimlerChrysler Aerospace, Bremen – All Rights Reserved – Copyright per DIN 34

The venting facility can also accept gas loads. The pressure of 0.13 Pa can be achieved only in the case of a gas load less than $3.0 \cdot 10^{-5}$ Pa·m^3/s**.** In fact, this value is the maximum allowable in the worst case position to reach the required pressure value within the imposed time of two hours. Lower gas loads fulfill the requirement in a shorter time; greater gas loads do not allow to reach 0.13 Pa at the worst case position.

Gas load data (inclusive of leakages) must be provided by each payload to be connected to the Venting Line for integrated analysis purposes.

The interface pressure performance reported in Figures 5.3.1.1–1 is based on a total leakage of $1.2 \cdot 10^{-4}$ Pa·m^3/*s* (this includes leakage from lines and interface QDs).

5.3.1.2 VENT GAS COMPATIBILITY

The vented gases have to be compatible with the materials used for the design of the vent line system. Payloads shall provide adequate design provisions to preclude mixture of vent gases which may react with each other.

5.3.2 PAYLOAD VACUUM LINE

The APM vacuum facility has the capability to maintain vacuum conditions at one or more payload rack interfaces simultaneously. To avoid cross contamination, payload waste gas purging is not allowed via the vacuum interface, but by means of the venting interface previously described.

5.3.2.1 INTERFACE PRESSURE

The vacuum facility (excluding QDs) is required to keep a single payload chamber at a pressure level of 0.13 Pa under a total gas load of 0.1 Pa·l/s ($1 \cdot 10^{-4}$ Pa·m^3/*s*), including payload internal leakage and out / offgassing, assuming infinite conductance between payload chamber and rack interface. The above mentioned value is guaranteed for dry air at the worst case rack location. For all other rack locations better vacuum conditions can be achieved.

By steady–state analysis, information on the pressure reached in any payload location can be obtained. Taking into account the scheme in Figure 5.3.2.1–1, Table 5.3.2.1–1 contains the maximum pressure value at the interface with the worst case position evacuated chamber for a total gas load, equally distributed among the evacuated payloads, corresponding to the required $1 \cdot 10^{-4}$ Pa·m^3/*s*. Evacuated chambers are marked with a black square (■).

DaimlerChrysler Aerospace, Bremen – All Rights Reserved – Copyright per DIN 34

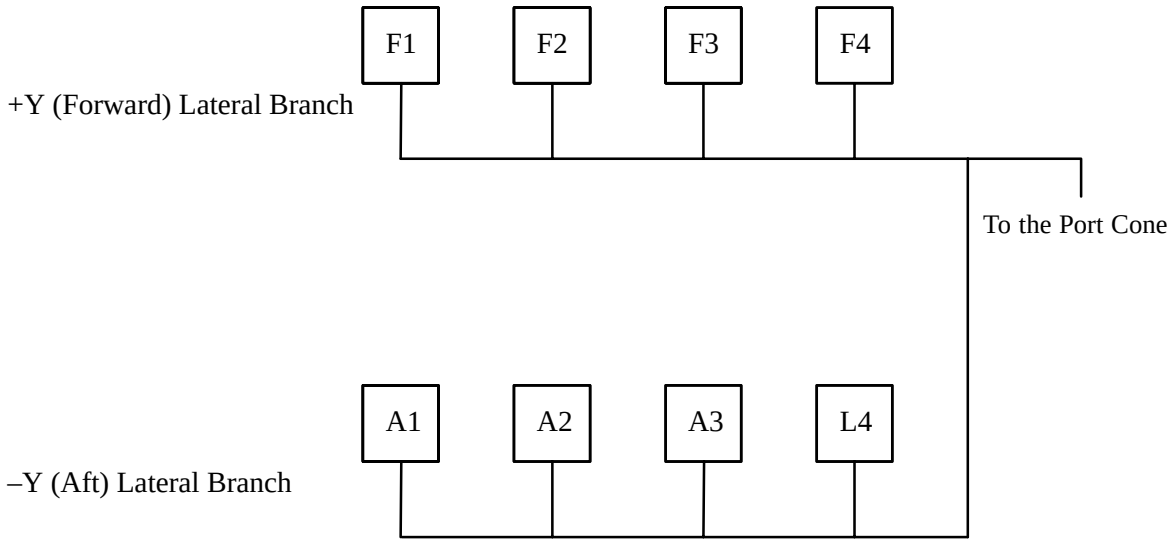

Main assumptions:

*) Air temperature: 20 °C, constant vs. time
*) External pressure: 0.001 Pa
*) Flow regimes:
transient (turbulent, laminar, molecular)
steady–state (laminar, molecular)
*) Gas loads: payloads=100 % of total gas loads, equally distributed among payloads
*) Leakages: 4.89E–6 Pa·m^3/s
*) Line Outgassing: 5.4E–6 Pa·m^3/s

FIGURE 5.3.2.1–1 VACUUM LINE BREAKDOWN WITH INDICATION OF EACH PAYLOAD LOCATION

DaimlerChrysler Aerospace, Bremen – All Rights Reserved – Copyright per DIN 34

TABLE 5.3.2.1–1 MAXIMUM STEADY STATE PRESSURE IN THE VACUUM LINE – GAS LOAD: $1 \cdot 10^{-4}$ Pa·m³/s

Configuration	Maximum Pressure Value [Pa]	Configuration	Maximum Pressure Value [Pa]
■□□□ □□□□	0.17	■■□□ ■□□□	0.15
□■□□ □□□□	0.16	■□□□ ■■□□	0.16
□□■□ □□□□	0.15	□□■■ □□□■	0.14
□□□■ □□□□	0.15	□□□■ □□■■	0.15
□□□□ ■□□□	0.19	■■■□ □□□□	0.15
□□□□ □■□□	0.18	□□□□ ■■■□	0.17
□□□□ □□■□	0.17	□■■■ □□□□	0.14
□□□□ □□□■	0.16	□□□□ □■■■	0.16
■□□□ ■□□□	0.15	■■□□ ■■□□	0.15
□□□■ □□□■	0.14	□□■■ □□■■	0.14
□□■■ □□□□	0.14	■■■■ □□□□	0.15
□□□□ □□■■	0.16	□□□□ ■■■■	0.16
■■□□ □□□□	0.16	■■■■ ■■■■	0.14
□□□□ ■■□□	0.17		

Gas load data must be provided by each payload to be connected to the Vacuum Line for integrated analysis purposes.

The interface pressure performance reported in Table 5.3.2.1–1 is based on a leakage of $4.89 \cdot 10^{-6}$ Pa*m³/s (this includes leakage from lines and interface QDs).

DaimlerChrysler Aerospace, Bremen – All Rights Reserved – Copyright per DIN 34

5.3.2.2 PROCESS GAS COMPATIBILITY

The gases processed in the payload vacuum facilities shall be compatible with the vacuum line materials as specified. Payloads shall provide adequate design provisions to preclude mixture of process gases which may react with each other.

DaimlerChrysler Aerospace, Bremen – All Rights Reserved – Copyright per DIN 34

5.4 NITROGEN DISTRIBUTION NETWORK

The N_2 supply interfaces are located at each payload rack at the utility interface panel. Payload provided shut–off valves within the payload rack provide control of the N_2 supply to the specific rack(s). Beside the N_2 supply for payloads the N_2 network is also used to re–pressurize the gas side of the accumulator in the Water Pump Assembly (WPA).

The overall schematic of the N_2 supply system for payloads is presented in Figure 5.4–1, Overall Schematic of the N_2 Supply System for Payloads. The N_2 Supply Line consists of the piping with the connections to the racks and the Port Cone D/B interface and of the necessary motorized Line Shut–Off Valves (LSOV).

There is no nitrogen interface provided from the APM system to the centre aisle payload.

Restrictions on the payload N_2 supply, caused by the accumulator repressurization function will apply. N_2 is shared among users; therefore, availability to a given user is subject to mission planning and the master timeline. N_2 can be delivered to multiple payload rack locations simultaneously. Depending on payload demand however, the mass flow is then shared accordingly.

Neither pressure monitoring nor leakage detection of the N_2 Supply Line are performed by the APM.

Different uses are foreseen, e.g. purging of vacuum chambers, pressurization of payload chambers, etc.

The maximum Nitrogen supply mass flow rate is 5.43 kg/h (12 lb/h). The Nitrogen supply is a shared usage resource. Flowrate may vary if more payloads are using this resource in parallel or if TCS accumulators are being re–charged. N2 will be controlled on ISS level, and allocation to payloads is part of the mission planning process.

DaimlerChrysler Aerospace, Bremen – All Rights Reserved – Copyright per DIN 34

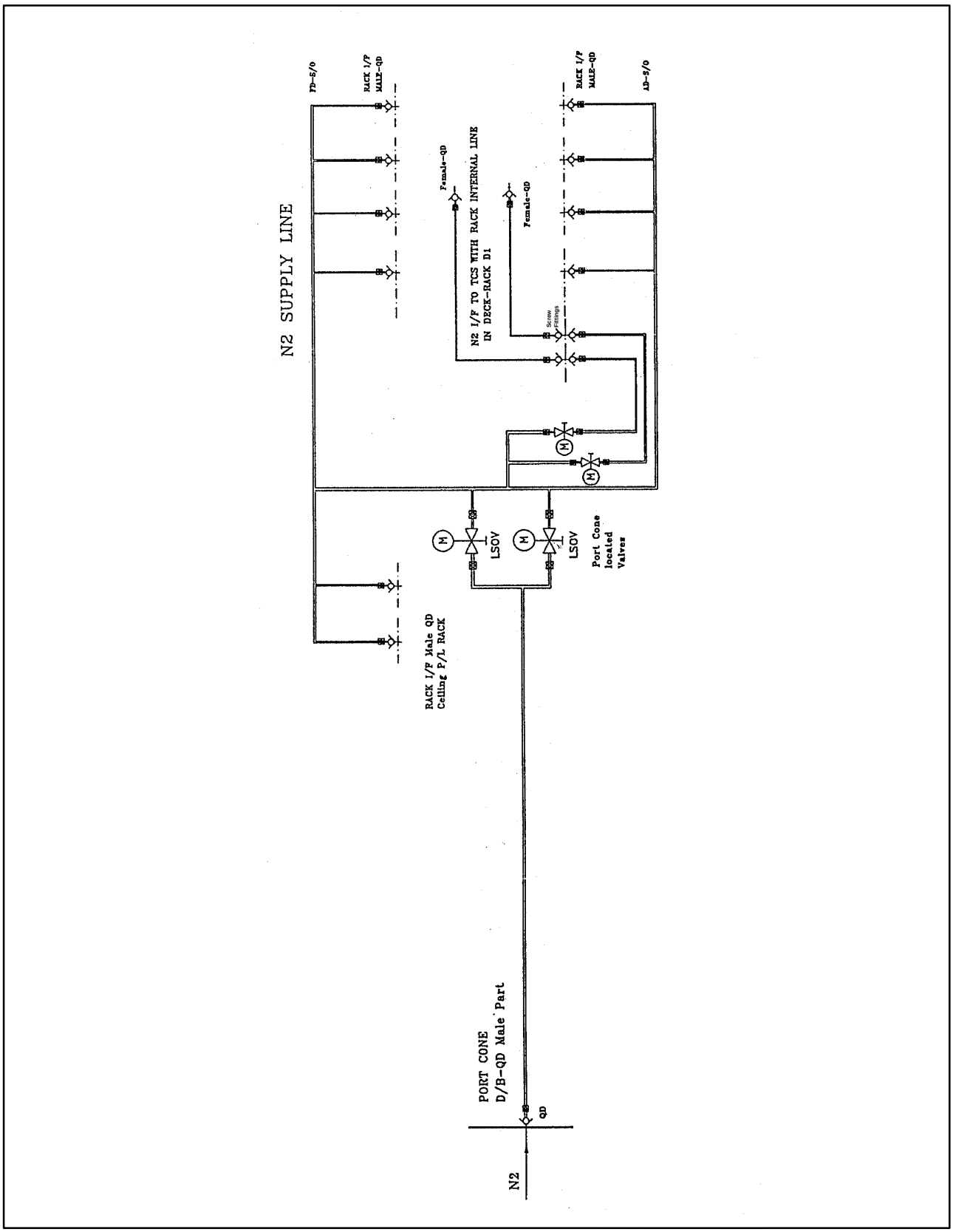

FIGURE 5.4–1 OVERALL SCHEMATIC OF THE N_2 SUPPLY SYSTEM FOR PAYLOADS

DaimlerChrysler Aerospace, Bremen – All Rights Reserved – Copyright per DIN 34

5.5 ELECTRICAL POWER TO PAYLOAD

As shown in Figure 5.5–1, APM Electrical Power Distribution System (EPDS), the APM distributes electrical power from the SSMB to payloads and the APM subsystems. Power to external APM payloads is distributed as shown in figure 5.5–2, APM External Power Distribution System for External Payloads.

The SSMB feeds the APM via two power buses (Bus 1&2). The source of the power buses from the SSMB are two pairs of DC to DC Power Converter Units (DDCUs) located in node 2.

The EPDS provides two identical Power Distribution Units (PDUs) for power distribution. Each PDU is assigned to a SSMB bus and provides internally full functional redundancy.

Within the APM the PDU performs main power reception, main power switching/distribution and protection of all ISPR dedicated outputs. Switching and protection is provided through Solid State Power Controllers (SSPCs).

All 10 ISPR rack locations are provided with a main power feeder and additional auxiliary power feeder. The ISPR auxiliary power feeder is redundant to the main feeder, i.e. it has its source in the SSMB bus which is different from the SSMB bus which supplies the main bus.
The fact that ISPRs are supplied for Main– and Auxiliary Power by the redundant PDU1 and PDU2 each, makes the ISPR power interface one failure redundant, however with a reduced performance since the two feeders are designed for different maximum continuous power. Payload developers should be aware that a failure/loss of a PDU means loss of Main– <u>or</u> Auxiliary Power for an ISPR. Therefore it is up to the payload developer design to establish a rack internal power distribution which maintains a failure tolerant power distribution to facilities.

The configuration/switching of PDU power outlets is controlled by the APM Data Management System (DMS). Each PDU provides two MIL 1553B interfaces, one connected to the DMS vital bus, the other to the DMS system bus. The PDU ISPR outlets can be individually commanded by on–board or ground ON/OFF commands.

The status of the outlets is monitored by the DMS. The following status indications per power outlet are provided:

- output ON (discrete)
- output OFF (discrete)
- output voltage, nominal (discrete)
- output current (analog) with an accuracy of ± 3%

The APM design assumes an activation of an ISPR by applying power to it and thus starting a payload processor (RT) which takes control over the rack internal power distribution. Therefore ISPRs need a manually or remotely operated switching device, like the Remote Power Distribution Assembly (RPDA), to switch on the ISPR individual loads <u>after</u> the PDU outlets for the rack have been commanded ”Power on”.

DaimlerChrysler Aerospace, Bremen – All Rights Reserved – Copyright per DIN 34

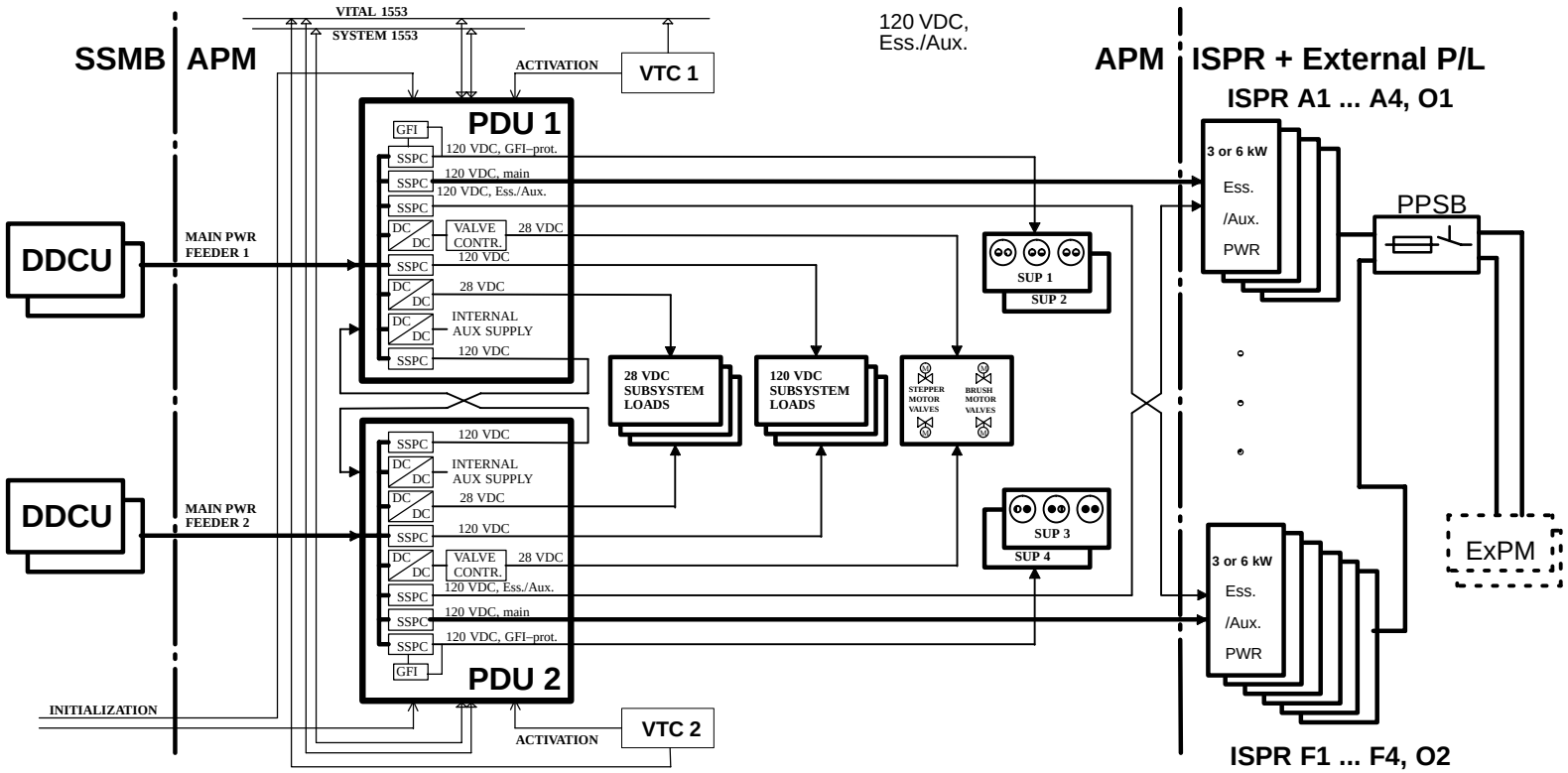

FIGURE 5.5–1 APM ELECTRICAL POWER DISTRIBUTION SYSTEM

DaimlerChrysler Aerospace, Bremen – All Rights Reserved – Copyright per DIN 34

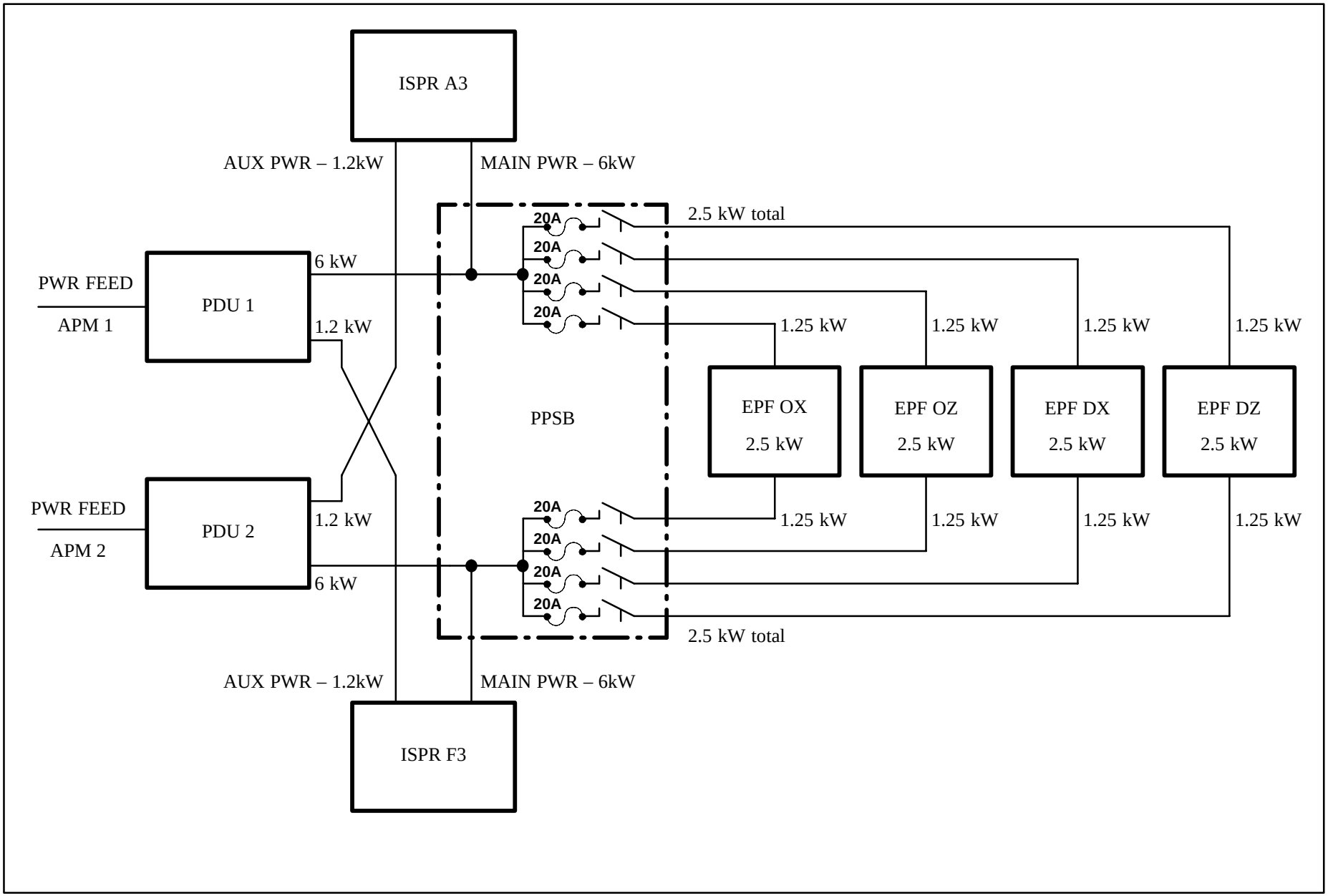

FIGURE 5.5–2 APM ELECTRICAL POWER DISTRIBUTION SYSTEM FOR EXTERNAL PAYLOADS

DaimlerChrysler Aerospace, Bremen – All Rights Reserved – Copyright per DIN 34

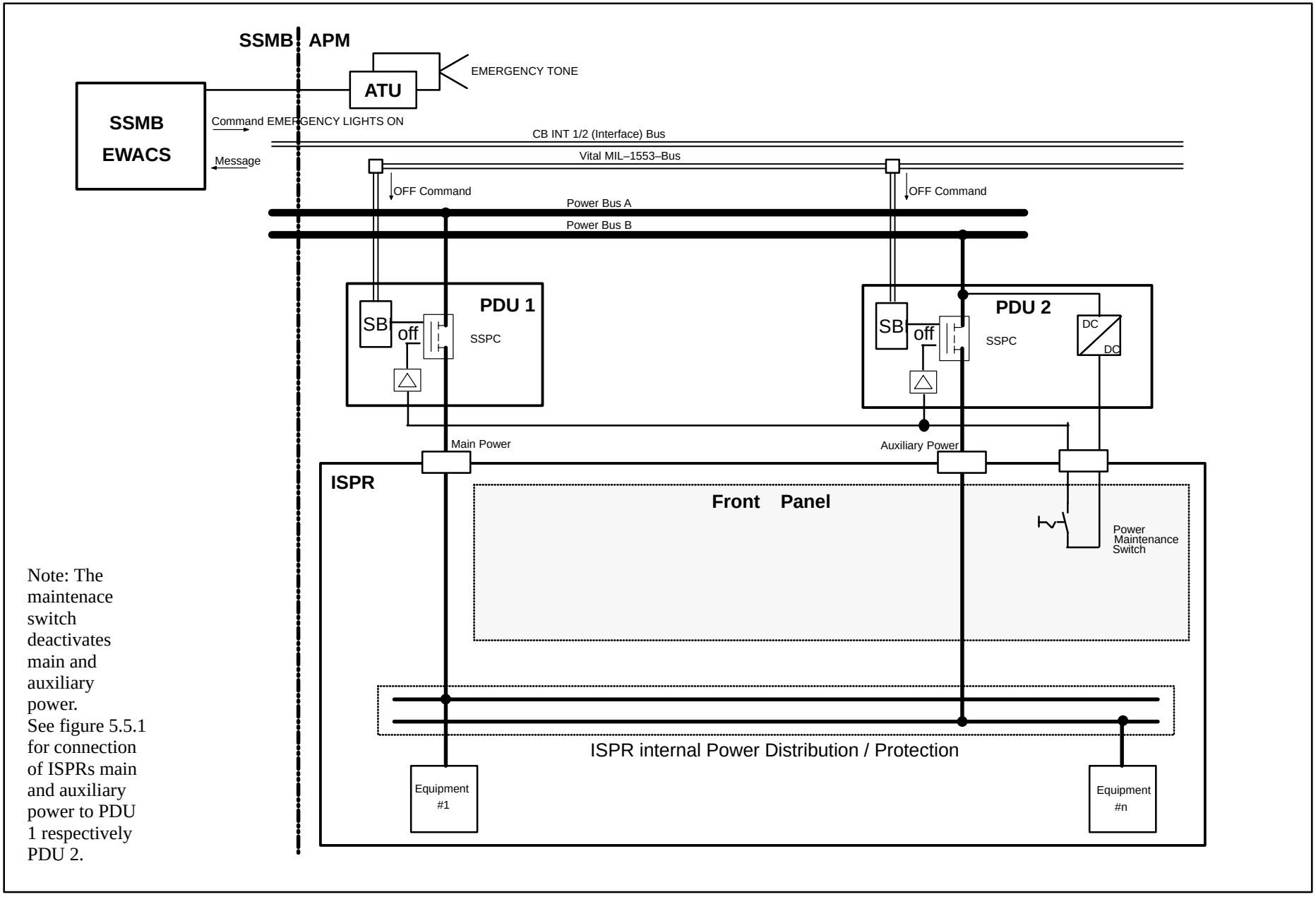

Note: The maintenace switch deactivates main and auxiliary power.
See figure 5.5.1 for connection of ISPRs main and auxiliary power to PDU 1 respectively PDU 2.

FIGURE 5.5–3 PDU TO ISPR INTERFACE

DaimlerChrysler Aerospace, Bremen – All Rights Reserved – Copyright per DIN 34

The protection of power outputs is done at SSPC level, via an adjustable, resettable current limiter. In addition, a direct hardwired power shut–down capability is provided for each ISPR dedicated SSPC. The shutdown is commanded by the maintenance power switch located on the ISPR front panel. Main and auxiliary power are both switched off when activating the maintenance power switch. The principle architecture of the PDU and the ISPR interface is given in Figure 5.5–2, PDU to ISPR Interface.

The power outlets in the four Standard Utility Panels (SUP) located in the lower stand–offs are provided with a Ground Fault Interrupter (GFI) in addition to the overload protection. The GFI will reduce the hazard potential in case of inadvertent crew contact with powered lines. These outlets are dedicated to centre aisle payloads, PCS laptop supply etc. .

5.5.1 POWER DISTRIBUTION TO PAYLOADS

The power distribution to payloads is shown in Table 5.5.1–1, Power Distribution to Payloads. In total, 13.5 kW continuous power to payloads can be provided which includes ISPRs, centre aisle payloads, and external payloads.

For the identification of the corresponding capabilities at the various rack locations refer to Table 3.2–1. ISPRs will be activated by applying power to the interface. The ISPR internal power distribution, switching and protection remains under the responsibility of the rack integrators.

Auxiliary power distribution to ISPRs is redundant to main power distribution, however with reduced performance. Auxiliary power of 1200 Watts is provided to each payload rack location.

If required, the auxiliary power allocated to the individual payload will always be active and it is the user responsibility to switch from main to auxiliary power. There are no operational usage restrictions of auxiliary power compared to main power, except the reduced supply performance.

TABLE 5.5.1–1 POWER DISTRIBUTION TO PAYLOADS

Type	No. of Outlets	Max. cont. Power [kW]	Remarks
ISPR High Power	5	6.0	
ISPR Medium Power	5	3.0	
ISPR Auxiliary Power	10	1.2	
Centre Aisle Payloads	4	0.5	GFI protected
External Payloads	8	1.25	

The APM provides at all four SUP locations one centre aisle payload dedicated power outlet. The power outlets at SUP 1 / 2 are the source for main power supply. If required, auxiliary power may be obtained from SUP 3 / 4 power outlets.

DaimlerChrysler Aerospace, Bremen – All Rights Reserved – Copyright per DIN 34

The APM provides at each ExPM two power outlets. The power outlets can be manually activated/deactivated by the Payload Power Switching Box (PPSB) which is accommodated inside the module. The switching will be done only in power off conditions. The PPSB provides a downstream harness protection by means of a fuse (see figure 5.5–2). There is no operational usage restriction on both power feeders available at each ExPM.

5.5.2 VOLTAGE QUALITY/ INRUSH CURRENT

The voltage quality and allowable inrush current requirements for both the payload main power and auxiliary power are defined in COL–RIBRE–SPE–0194 (Reference document 2.2.18).

5.5.3 ELECTRICAL POWER LOAD SHEDDING

The electrical power and thermal system management of the ISS may require in exceptional cases sudden changes in the load profiles. Therefore payloads should withstand sudden, unscheduled loss of electrical power.
Power Load shedding will be performed on ISS operational level and predefined ”load shedding tables” for each module will be executed. The load shedding tables will be defined for each mission increment. They will define in which sequence the ISPRs or external payloads will be shut–down.

5.5.4 POWER CONNECTOR INTERFACE

For the ISPR Utility Interface Panel (UIP) and Standard Utility Panel (SUP) electrical interface connector location, connector types and pin assignments refer to COL–RIBRE–SPE–0164 (R.D. 2.2.18).

For the ExPM interface connector location, connector types and pin assignments refer to COL–RIBRE–SPE–0165 (R.D. 2.2.19)

DaimlerChrysler Aerospace, Bremen – All Rights Reserved – Copyright per DIN 34

5.6 DATA MANAGEMENT SYSTEM

The Data Management System (DMS) consists of a distributed information management system, hardware and software items, which provides an overall environment for all onboard information management and data processing functions as already briefly described in chapter 4.3.4.1.

US payloads hosted in the APM are controlled by the US– Lab Payload MDM via an extension of the US payload bus into the APM module and is under US–Lab responsibility.
An extension of the US LAN–2 into the APM module allows medium rate data transmission for US ISPRs hosted in the APM. The communication via this interface to the PEHG is US–Lab responsibility.
High rate data transmission for US payloads hosted in the APM may be established between the ISPRs and the US–Lab Automated Payload Switch (APS) via the High Rate Data Link (HRDL). The communication control is a US–Lab responsibility.

As noted above the US–Lab is responsible for the US–Lab payload bus, US–Lab Lan and the US–Lab HRDL interface. These interfaces are described in the Pressurized Payloads Interface Requirements Document (reference document 2.2.4).
Therefore the following chapters give an overview of the DMS services available for European payloads only.

5.6.1 GENERAL DESCRIPTION

The Data Management System provides to the individual payload and the total APM payload an environment which allows to control, to interact with and to monitor payload operations. Furthermore the system supports the down linking of payload data as low rate data, medium rate and high rate data. The system is designed to operate European payloads in the APM.
The basic DMS services are:

- Payload Control Unit (PLCU) provided services as a subset of the overall DMS services
- Payload APM IEEE 802.3 LAN interface
- Further software services for Payload flight operation including APM PCS (Laptop) operation
- APM system laptop services
- Communication between the APM PLCU and the SSMB via the C&C Bus (e.g. with the US–Lab Payload MDM via the lateral transfer function)

DaimlerChrysler Aerospace, Bremen – All Rights Reserved – Copyright per DIN 34

5.6.2 PAYLOAD CATEGORIES

For ESA payloads accommodated within the APM basically three kinds/modes of payload operations can be distinguished:

- Automated Operations
- Interactive & Telescience Operations
- Manual Operations

Automated Operations

During automatic operations a pre–programmed experiment sequence will be executed without interruption and controlled by a payload internal software. The execution might be initialized by the crew, ground or automatically through the APM master timeline and will be terminated by setting of experiment facilities to a safe state and a clear message to the crew and to the ground.

In this mode the experiment facilities will regularly provide status messages to the APM system. In off–nominal situations the facility will submit requests for support to the crew and the ground users. Especially for these cases override capability by the crew and/or ground must be provided. Modification of automatic operations will be possible by the crew and users by means of interactive commands after change requests have been submitted and approved to/by APM–CC. After experiment sequence initiation no direct user command intervention is foreseen.

Interactive & Telescience Operations

During interactive or semi–automatic operations a pre–programmed experiment sequence will not be completely executed by the payload software. At predefined positions the program requests the intervention of the crew or ground. Interventions might for example be necessary for setting of parameters, adjustments or decisions. This mode is especially appropriate for unexpected situations. Issue of payload reconfiguration commands by the on–board crew or the ground user is expected after transmission command request is approved by the APM–CC and the up– and downlink resources have been made available.

Telescience is the extended concept of interactive payload operations. Users will be able to operate, i.e. directly monitor and control, an on–board instrument by a defined set of telecommands from the ground. Transparency of operations is essential and will be provided by adequate data flow and video images. From the observed behaviour the user will be able to develop a sequence of real time interactive operations. In this mode the users are allowed to operate their payload within the allocated operational window and envelope by means of authorized commands, which can be directly issued by the user after being enabled by the APM–CC.

DaimlerChrysler Aerospace, Bremen – All Rights Reserved – Copyright per DIN 34

Manual Operations

Manual mode addresses operations of experiment facilities by manipulative interactions, operation of front panel switches or buttons, and usage of dedicated graphical control displays supported by crew procedures. In the manual mode a direct manual action of the crew on the payload is required. Due to limited availability of crew time nominal manual activities will only be performed to the extent necessary. In general manual activities will be performed in support of malfunction recovery, unexpected experiment phenomena, and in case of complex decision processes.

The above given types of operations may be combined together for a given operations sequence and thus lead to mixed operations.

In order to be operated in one or the other way each payload must support a certain configuration. This configuration is determined by the complexity of the payload with respect to provided instruments and processing/interface capabilities. There exist basically three payload configurations within the APM.

- Independent Type Payloads
- Intelligent Type Payloads
- Non–Intelligent Type Payloads

Independent Type Payloads

Most ESA payloads falling into this category will be facility type payloads providing their own data management and support infrastructure for contained instruments and experiments. These facilities will most likely be connected to the APM system via both the APM LAN interface and as a Remote Terminal (RT) on the APM payload bus. It is assumed that these payloads will not have application software residing in the PLCU. Independent type payloads allow any of the three operational modes described above to be used in any combination.

Intelligent Type Payloads

Payloads falling into this category will have a dedicated payload computer because of either their hardware complexity or the amount of operations that they need to perform. Compared with the previous type the intelligent type payload computer will probably only be connected as a RT to the payload bus. Specific payload applications will reside and be executed on the PLCU, and DMS/PLCU provided services such as telemetry packet generation or automated procedure execution will be utilized by this type of payload. Intelligent type payloads also allow any of the three operational modes described above in any combination.

DaimlerChrysler Aerospace, Bremen – All Rights Reserved – Copyright per DIN 34

Non–Intelligent Type Payloads

Non–intelligent type payloads are those which do not have enough hardware to justify a dedicated payload computer, and consequently the instrument control and monitoring will be achieved via a Control and Monitoring Unit (CMU) interface device. This unit may serve various payloads and will be connected as a remote terminal to the APM payload bus. Since the CMU is a pure i/o device driven via the payload bus, this kind of payload must provide some payload applications software in the PLCU to control payload operations. The software can either be a set of automated procedures or a more complex software package, depending on the complexity of the operations to be performed. All three operational modes and combinations apply.

Regardless of its data interface to the APM system, each payload may be connected via fibre optic lines to the VDPU for high rate data and/or video data transfer.

5.6.3 PAYLOAD CONTROL UNIT PROVIDED SERVICES FOR PAYLOADS

The software services and computing environment provided for applications in the PLCU are the same as those provided for the system. The overall system concepts for telecommanding, monitoring, housekeeping etc. have been designed to take into consideration payload applications needs.
The following services can be used to support payload operations:

- Data Acquisition and Distribution (data pool services)
- CCSDS Packet Routing
- CCSDS Telemetry Packet Generation
- Telemetry Processing
- Telecommand Processing
- Data Processing (trend analysis, means analysis)
- Data Monitoring
- UCL User Application Programming Interface for FLAP development
- ADA User Application Programming Interface for SWOP development
- Event Management
- Logging
- RT protocol support

Figure 5.6.3 –1, PLCU Software Structure, shows the PLCU software structure which supports the user services for payloads.

The above user services establish an interface to PLCU applications and S/W configuration tables provided by the Payload Increment Mission Manager on an increment to increment basis. Payload processor software will interface these dedicated applications.

DaimlerChrysler Aerospace, Bremen – All Rights Reserved – Copyright per DIN 34

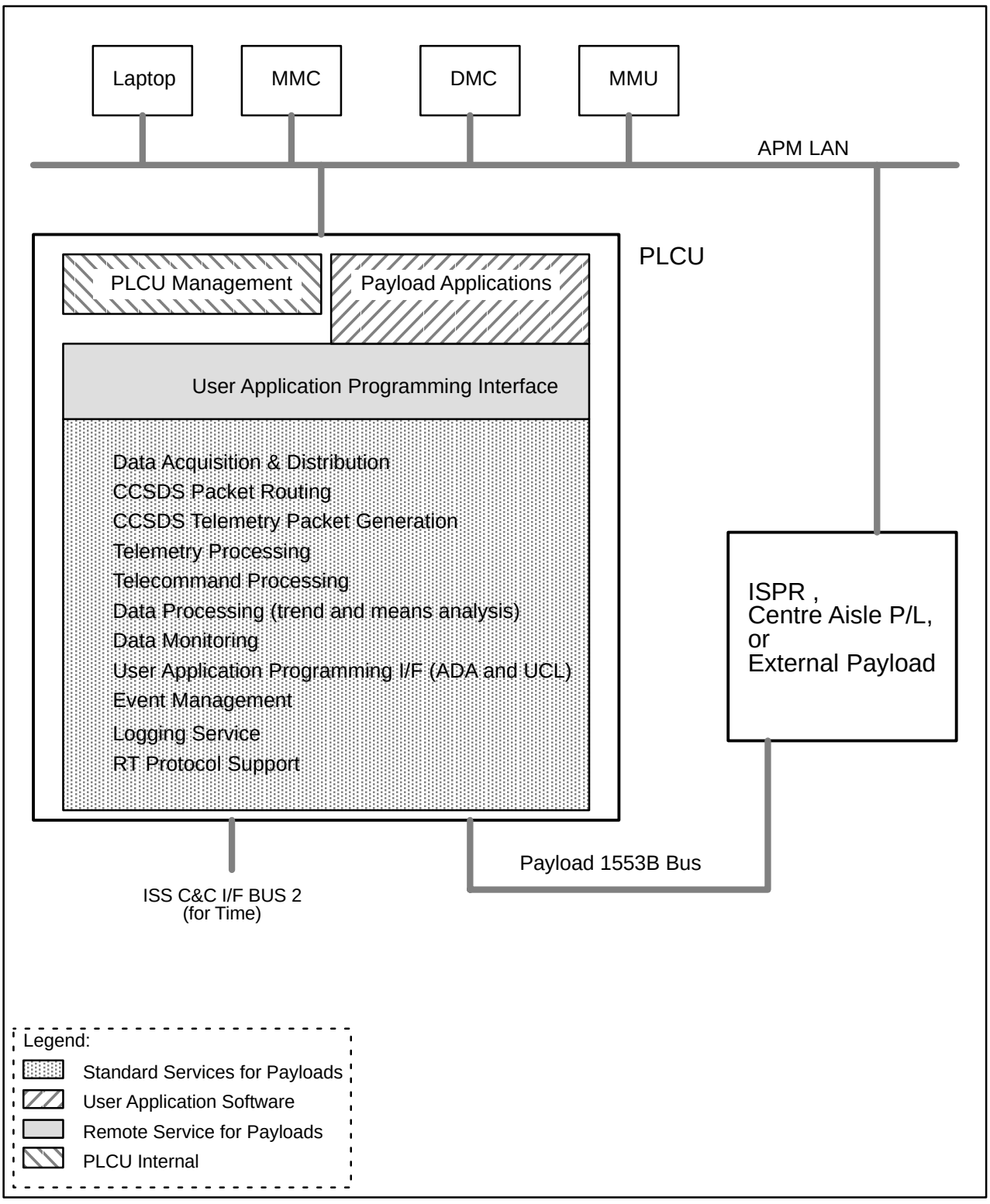

FIGURE 5.6.3–1 PLCU SERVICES

DaimlerChrysler Aerospace, Bremen – All Rights Reserved – Copyright per DIN 34

5.6.3.1 DATA ACQUISITION AND DISTRIBUTION

The DMS Data Acquisition and Distribution is centred on a Data Pool concept. In this approach acquired data from the APM system and a set of Payload MIL Bus acquired data are written into the data pool. The data pool contents are mirrored automatically by the DMS in each of the DMS processing nodes, including the laptop in support of synoptic displays. The DMS will read data pool contents in order to perform functions such as monitoring, housekeeping packet generation and as stated, synoptic displays. The Data Pool contents may also support payload ADA applications running in the PLCU.

Payload bus acquired data will be either part of the distributed data pool, or part of the PLCU local data pool. The allocation will be done by configuration of the MDB per Remote Terminal Subaddress. Independent from the allocation the same set of DMS services is available for distributed and local data pool data.

Certain data are required by the system from each payload to support monitoring of the payload performance, the operational state, and resource consumptions. These data are called payload health & status (H&S) data and they will be permanently cyclically acquired. Some examples of H&S data are:

- subsystem status (power, voltages, currents, temperatures, pressures, facility on/off status, valve status, fluid flow velocities, facility health status)
- digital communications system statistic (1553B, ethernet, high rate system)
- video system status (camera, recorder on/off status)

Such data are placed in the onboard data pool where they may be accessed by the other functions. The Health&Status data are acquired by the PLCU via the RT protocol. The payload health & status data are considered after acquisition as system data (in the same way as the ISPR smoke sensor measurements are considered system data although they originate in payload racks).

The H&S data will be generic enough to fit to any payload (in the same way that the ISPR HW instrumentation is generic enough to fit to any payload). Should payloads (due to their design) not be able to provide all these parameters, then the corresponding measurements will remain in the data pool, but will be disabled for that mission increment, similar to measurements of cold redundant units being disabled while the unit is off. As a result of this concept, the APM datapool layout does not change due to payload increments.

Payload low rate science data and housekeeping data can be acquired by the PLCU via the payload bus. The data are transferred from the payload RT to the PLCU, which is the bus controller, by using the RT protocol.

As well as containing values acquired from sensors, the PLCU may contain software generated values. These data values may be calculated by a payload software application and used by other functions to support e.g., housekeeping, synopsis etc.

To support trouble shooting, an oversampling capability is provided allowing an acquisition frequency of 100 Hz for up to 5 sensor values in the system. The data will be stored in a file on the MMU and can be downlinked on request. The oversampling packet format need to be predefined.

DaimlerChrysler Aerospace, Bremen – All Rights Reserved – Copyright per DIN 34

The payload mission integrator will collect all necessary DMS requirements during the increment preparation phase and defines the integrated payload consolidated DMS requirements for engineering support implementation.

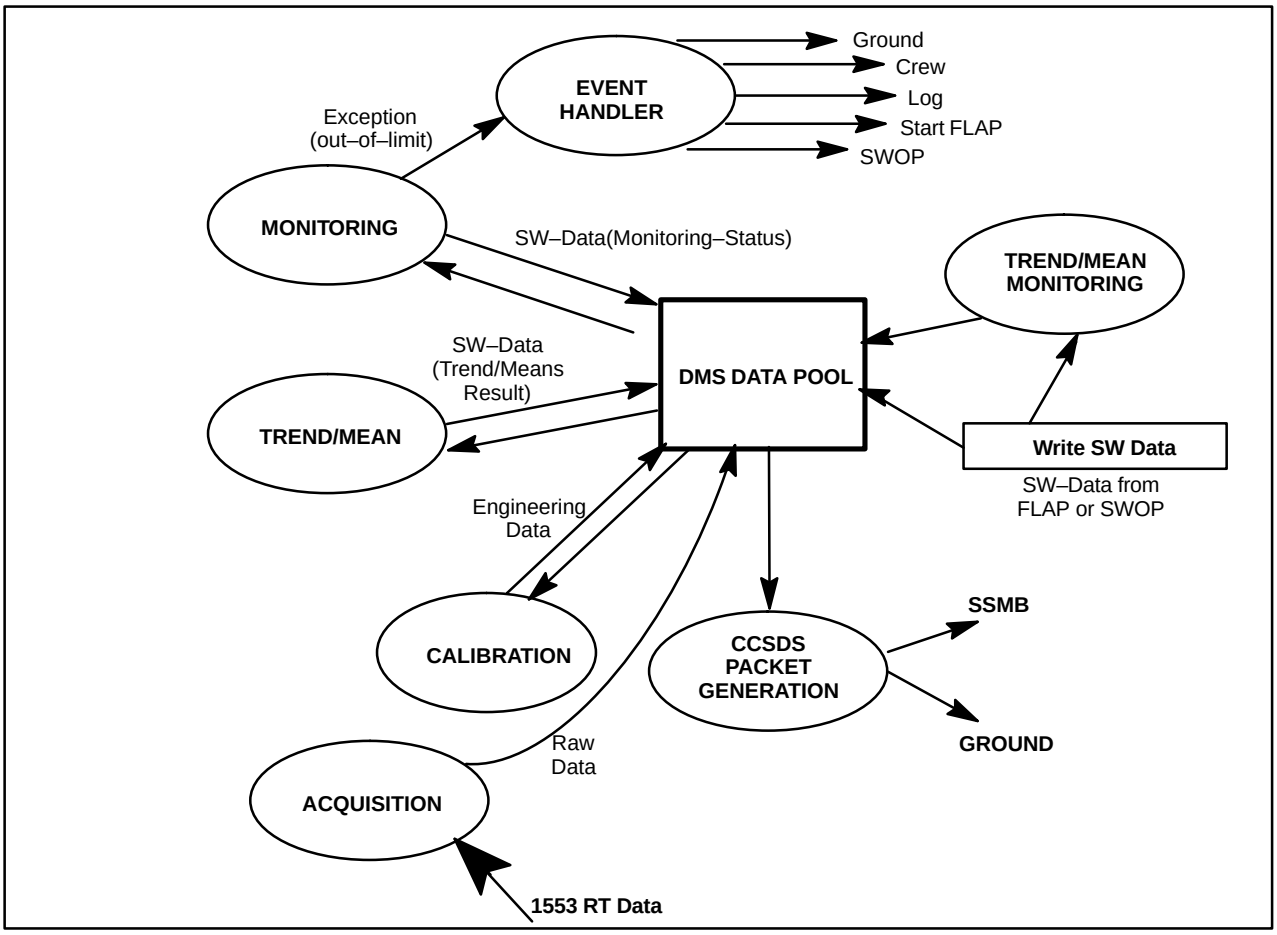

FIGURE 5.6.3.1–1 COMMON DATA POOL DATA FLOW LOGIC

5.6.3.2 TELEMETRY AND TELECOMMAND SERVICES

The DMS supports the receiving of telecommands from ground (APM–CC) and the sending of telemetry to the ground (APM–CC) according to CCSDS recommendations.

5.6.3.2.1 CCSDS ROUTING SERVICE

The APM DMS requires that all communication between the ground system and onboard command & data handling components is performed in the form of CCSDS packets.

For payload MIL 1553B bus RT protocol acquired data the APM DMS is able to generate CCDSDS telemetry packets and transmit them to the ground.

DaimlerChrysler Aerospace, Bremen – All Rights Reserved – Copyright per DIN 34

5.6.3.2.2 CCSDS PACKET GENERATION

The CCSDS packet formatter controls the emission of cyclic or single shot CCSDS packets from the PLCU to the destination. The structure and format of the CCSDS packets have to be predefined in the onboard database. The CCSDS packet generation service can be used for payload data available in the PLCU, either in the local or distributed part of the datapool.

The DMS service provides the function to start and stop the CCSDS packet generation. This instructs the PLCU to collect the data, assemble them and send the CCSDS packets at predefined time intervals until the packet generation will be stopped. The CCSDS packet destination will be defined by the APID in the primary header.

Payload APID allocation to the different sources and destinations is the task of the engineering support team with payload integration team support. A limited APID budget will be allocated for APM payloads from the total APID budget of the ISS.

The routing of payload science data for specific operations th the relevant FRC, USOC, UHB, or COLUMBUS–CC user room is handled by the ground segment planning process. This allows the routing to vary depending on the PI responsible for the specific operation.

5.6.3.2.3 TELEMETRY PROCESSING

The DMS provides a flexible Telemetry (TM) system which is compliant with CCSDS AOS recommendations at packet level.

The APM TM system allows variable rate and content generation of payload Housekeeping (HK) & low rate science data acquired by the MIL Bus RT protocol, as well as system/subsystem HK from the distributed onboard system, thereby supporting the many different operational phases and system/payload configurations.

This ensures that data content and rate can be modified to fit into restricted and variable downlink bandwidth and that the right data can be downlinked at the right time within these bandwidth constraints. The major features of the DMS TM system are:

DaimlerChrysler Aerospace, Bremen – All Rights Reserved – Copyright per DIN 34

- Packet Definition and Packet Definition Table Execution
  - Housekeeping telemetry packets are generated at run–time using a TM packet definition (descriptor) stored in the onboard database. As many (TM) packet descriptors can be pre–defined as necessary given only certain system limitations such as onboard payload mass storage.
  - Several TM packets can be generated in parallel in the PLCU, again limited only by certain design and storage limitations and performance restrictions such as the rate of packets on interfaces.
  - The set of HK packets being generated at any one time can be varied.
  - Packet generation can be initiated and halted by PLCU applications (ADA and UCL/APs), by the crew through the laptop, and by the APM control centre.
  - Data flow control is performed by operationally controlling which packets are generated and the packet rate.
- Packet Rate
  - HK packet rate generation in the DMS is specified at initiation of packet generation, either a single shot or cyclic at a specified rate.
  - Certain TM packets, such as command responses, reports & exceptions are always single shot.
- Packet Contents
  - Telemetry packets can contain the value of any (appropriate) end–item within the onboard database as dynamically reflected in the local and distributed part of the data pool.
    For payloads, a definition of the required parameters must be supplied for inclusion into the mission data base in order to support the onboard configuration tables and common data pool.
    In general these packets will contain RT protocol acquired measurements.
  - Beside the overall size restrictions imposed by the space/ground system and CCSDS limitations, the maximum on–board packet size is 1472 byte (including headers). This maximum packet size is also valid for CCSDS packets transmitted by the payload via the ISPR LAN interface and for CCSDS packets transmitted via the payload bus.
- Report & Exception Packets
  - Progress, report and success type of messages can be down linked in asynchronous report type packets. These packets can also contain any appropriate HW or SW end item value.

5.6.3.2.4 TELECOMMAND PROCESSING

Commands may be initiated on ground or onboard. A CCSDS command is a CCSDS packet containing a SW command. For payloads this SW command will be a RT protocol command to be issued on the MIL Bus. The command issuing will be performed by the system command executor within the PLCU.

A payload PLCU application is also able to issue RT protocol commands.

In addition ground commands may also be CCSDS commands directly transferred by the MMC to the payload LAN interface. In this case all CCSDS packets are transferred by the UDP/IP protocol on top of the Ethernet II protocol.

DaimlerChrysler Aerospace, Bremen – All Rights Reserved – Copyright per DIN 34

5.6.3.3 ANCILLARY DATA

Ancillary data are system and payload generated data describing the current onboard environment. They are required to support onboard operation of the APM system and APM payloads as well as ground control and user analysis. The ancillary data may come from the following sources:

- ISS system ancillary data coming from the C&C MDM to the APM system such as ISS state vector, communication configuration data etc.
  The subset of the ISS ancillary data forwarded to APM payloads are static when defined once.
- Tailored local APM system ancillary and housekeeping data.

The whole set of ancillary data provided by SSMB is received by the MMC, selected for the APM needs, and stored in the data pool.

During MDM reconfiguration the ancillary data in the data pool will not be refreshed for a period of approximately 20 seconds. The ancillary data values prior reconfiguration will remain during this period. The reconfiguration can occur at any time.

If required, ancillary data for payloads connected to the APM LAN will be transmitted from the PLCU to the APM payloads as individual point to point CCSDS packets via the LAN. The ancillary data transfer can be initiated and stopped by a payload CCSDS command to the PLCU SWOP which controls the ancillary data transmission. Generation and integration of the ancillary data PLCU SWOP is Payload Mission Integrator responsiblity.

5.6.3.4 PLCU DATA PROCESSING SUPPORT

5.6.3.4.1 TREND ANALYSIS

The DMS provides the user with the capability to perform trend analysis from individual acquired measurements (RT protocol measurements or software generated data). The trend will be calculated cyclically.

The DMS supports the rate of change of data with respect to time for payload End Item data and software generated data. The current value acquired is compared with 1 to N previous values, where N is specified by the user of the service. The DMS averages the N previous values and calculates the rate of change, returning that value to the caller of the service.

To perform trend analysis it is required that the trend analysis End Items are defined in the MDB. This provides the capability to downlink, monitor and display trend results.

5.6.3.4.2 MEANS ANALYSIS

The DMS provides the user with the capability to perform means analysis from individual acquired measurements (RT protocol measurements or software generated data). The means will be calculated cyclically.

DaimlerChrysler Aerospace, Bremen – All Rights Reserved – Copyright per DIN 34

It is possible to calculate the mean value of specific data stored in the data pool. The mean shall be calculated on the previous N values as specified by the user, and the calculation method is the quadratic or arithmetic mean. The calculation may be performed either cyclically or on request depending on the user needs. The calculated means may be monitored.

To perform means analysis it is required that the means analysis End Items are defined in the MDB. This provides the capability to downlink, monitor and display means results.

5.6.3.5 DATA EXCEPTION MONITORING

Exception monitoring can be performed on payload raw data. A calibration will only be performed on the raw data for displaying them on the crew laptop. Exception monitoring will be in general only be performed on a subset of the payload health & status data.

The exception monitoring service provided by the DMS is table driven and is configured with monitoring tables as a part of the MDB. A monitoring table identifies a set of End Items with variable types (analog, discrete, SW variables) which have to be monitored. The monitoring frequency for each End Item shall not exceed the acquisition frequency.

It is a prerequisite that the payload data to be monitored, must be available in the PLCU (local or distributed part).

A monitoring table is defined by the following parameters:

- List of end–items to be monitored under their logical name – SID (Short Identifier)
- Individual limits and/or expected state
- Set of limits (high & low limits)
- N–Count (counter when the exception shall be raised)
- Monitoring frequency: 1Hz or 0.1 Hz
- Out of limit reaction (e.g. message to crew/ ground/ user application, AP activation)

Each end–item in the monitoring table is to be monitored against an individual limit or state for discrete values, or a set of limits for analogue values. For analogue values, there are two sets of limits, two high and two low. An out of limit condition occurs when the monitored values passes from within the limit to beyond it. The N–Count number defines the number of consecutive out–of–limits to be detected before the exception is raised. Each monitor limit is associated with a separate N–Count.

With the monitoring table concept it is possible to respond differently to different exceptions depending on the nature/criticality of the exception. Exceptions may trigger Failure Management processing, or may trigger directly the execution of a Failure Management Automated Procedure (AP).

DaimlerChrysler Aerospace, Bremen – All Rights Reserved – Copyright per DIN 34

The crew will be informed in any case of an exception, but the ground personal can only be informed when the downlink is available. Exception messages occurred during Loss of Signal periods are not downlinked and therefore not visible on ground. They are logged by the APM event logger and the logging file may be dumped to ground during downlink availability.

The monitoring service may be configured by Payload ADA Applications, Payload APs and Ground commands. The following tasks may be performed:

- Enable/ Disable monitoring of an individual End Item or a complete monitoring table
- Load/ Unload a monitoring table
- Change the monitoring limit of an analog or discrete item in a monitoring table
- Change the N–Count value for a specific item to be monitored
- Change the action to be performed on exception detection

The following prerequisites are necessary to perform exception monitoring:

- The Monitoring Table need to be configured in the MDB. Each End Item has to be in the MDB.
- Definition of error messages.
- Definition of payload automated procedures which shall be triggered by an exception.
- Definition of the payload SWOPs or FLAPs which shall be triggered by an exception.

5.6.3.6 USER APPLICATION PROGRAMMING INTERFACE

The execution environment in the PLCU will support the linking of dynamic link libraries to programs at program run–time. The operating system will be a POSIX based system (VxWorks, from Wind River Systems). The environment will support payload applications in terms of:

- Support loading/unloading of software and data
- Dynamic binding of ADA and C programs to the execution environment and interface of ADA and C programs
- Message exchange both locally and remotely over the network, transparently to the application via TCP/IP.

5.6.3.6.1 ADA LANGUAGE SUPPORT

The DMS execution environment supports the use of full ADA as defined in the ADA Reference Manual.

5.6.3.6.2 USER CONTROL LANGUAGE SUPPORT

The DMS will interpret the so called Flight Automated Procedures or FLAPs written in the User Control Language (UCL).

DaimlerChrysler Aerospace, Bremen – All Rights Reserved – Copyright per DIN 34

The DMS will support the execution of up to 10 concurrent Payload Flight Automated Procedures (FLAPs) in the PLCU. Each FLAP will run in one of the 10 designated Slots. Each slot has the required memory and resources to perform the execution of the FLAP. A FLAP may be nested, calling other FLAPs up to 5 nesting levels.

FLAPs may be used for normal reconfiguration or to support Failure Management (FM) reconfiguration. Failure Management activities have priority over nominal activities and therefore the UCL interpreter supports a 2 level priority scheme. FM procedures may therefore be assigned to the higher priority when the procedure is called.

As required by the user, FLAPs may be started immediately, or given as a time–tagged command. The user may also indicate that the procedure is to be executed in single step (interactive) mode or automatic mode, and may suspend/resume or abort the FLAP.

The DMS provides various management information about the execution status of executing APs. The DMS will provide the identification of the currently loaded APs in the PLCU, showing the calling structure of the APs. Additionally, the execution status of all FLAPs in the PLCU or individually specified FLAPs can be requested. This information will show if the FLAP is running or stopped. For FLAPs in stop mode, the next step of the FLAP to be executed is indicated.

5.6.3.7 FAILURE MANAGEMENT SERVICES

Communication error events will be detected by the PLCU BC from the MIL bus status word. The following end items will be stored in the PLCU datapool, and can be used for transmission to ground.

- Message Error bit
- Busy bit
- Subsystem flag bit
- Terminal flag bit

In addition the RT no response timeout and RT transmission error will be stored in the datapool.

The DMS also acquires the Subaddress #1 where the RT provides indication of the data acquisition validity and the remote terminal unit health status. These data will be stored in the datapool and can be accessed by the crew or ground personal.

The communication error status available in the datapool can be monitored and used to initiate exception messages, or to activate a FLAP to perform an activity.

DaimlerChrysler Aerospace, Bremen – All Rights Reserved – Copyright per DIN 34

5.6.3.8 LOGGING

The DMS provides an asynchronous logging services. Payload applications in the PLCU may store key information into the log required for future analysis and investigation on ground. Monitoring exceptions (out–of–limit conditions) on RT protocol acquired measurements in the PLCU will be logged automatically by the DMS.
The log will be stored on the mass memory unit. The maximum size of the log file is fixed and will be configured via the MDB. The log file is implemented as a wrap–around file with new entries writing over the old ones when the file is full. However when the log file is filled at 90%, a warning message is sent to the ground. The log file is available to the ground on request.

The DMS handles APM–CC requests for the downlink of the log file, either as a complete log file or specified portions thereof.

5.6.3.9 RT PROTOCOL SUPPORT

The PLCU supports the RT protocol to perform the communication with a payload Remote Terminal via the payload MIL Bus.
The RT protocol is a MIL–STD–1553B protocol composed from command words, data words and status words. The RT protocol allows the transmission of self defined low level commands by the Extended Command Word utilizing the first data word of a MIL–STD command.
The PLCU always initiates the information transmission on the bus.

5.6.3.10 CCSDS PROTOCOL SUPPORT

The PLCU supports the CCSDS protocol to perform CCSDS packet based communication with a payload rack controller via the APM LAN interface.

5.6.3.11 TIME DISTRIBUTION

The MIL STD1553B message type ‘‘BROADCAST” is used for the delivery of time information to all RTs via the payload bus. The time code format is CCSDS calendar segmented time code format and the defined epoch is GPS time. The time is transmitted via broadcast once per second with a resolution of 1 µsec.

5.6.3.12 RECONFIGURATIONS

The APM DMS consists of four identical computers implementing the nominal data processing functions of the DMS. One of the four computers is the spare computer which is a cold redundant computer able to substitute for any of the other computers, also for the PLCU. The spare computer is switched off during nominal DMS use.

DaimlerChrysler Aerospace, Bremen – All Rights Reserved – Copyright per DIN 34

If a PLCU crash occurs which requires a configuration of the spare computer as PLCU there will be no telemetry/telecommand capability for payloads on the payload bus. The reconfiguration takes approximately five minutes. Normally no crew intervention is required for the reconfiguration which will be performed by a DMS FLAP. The APM DMS maintains a record of all software running in the PLCU which allows the configuration of the spare computer in the same mode as the PLCU prior to a crash. Every change in the DMS configuration will be checkpointed on the MMU. This is related to the following functions:

- Telemetry
- Acquisition
- Monitoring
- Trend/Means
- SWOP handling
- FLAP handling

If checkpointing is required by a payload application on the PLCU, it is the responsibility of the application developer to create and update a checkpointing file.

PLCU hardware and software failures occuring during activation, reconfiguration or nominal operation are reported to the APM DMS. The APM DMS provides a failure report to the system laptop, SSMB and ground system. The report identifies the equipment or software onboard program (SWOP) in which the error occurred, the time of occurrence and the type of failure.

The payload software has to assure that the payload continues nominal operation or enters a safe operational mode if the connection to the PLCU is broken.

5.6.4 PAYLOAD MIL– STD 1553B BUS

5.6.4.1 GENERAL

The MIL–STD–1553B Bus (Full name: MIL–STD–1553B Digital Time Division Command/Response Multiplexer Data Bus) is a serial data bus based on message transmission.

Each message format is made up of control words called command and status. Data words are used to encode communication between system elements.

Some of the MIL–STD–1553B system key elements are the bus controller, the remote terminal and two other devices of the 1553 integration; the twisted shielded pair wire data bus and the bus InterConnection Station (ICS).

DaimlerChrysler Aerospace, Bremen – All Rights Reserved – Copyright per DIN 34

The Bus Controller's (BC) main function is to provide data flow control for all transmissions on the bus. In this role, the bus controller is the sole manager of communication. The Payload Bus applies a command/response method where the commands are issued by the bus controller and the Remote Terminals (RTs) have to respond accordingly. For the Payload Bus the PLCU will act as BC and the payload communication processors will act as RTs. The payload communication processor will be responsible for the rack internal communication to be performed with the facilities.

A further constituent is the Payload bus itself. The standard defines specific characteristics for the cable and for connector polarity. There are two Payload buses, called nominal Payload bus and redundant Payload bus.

The Interconnection Station (ICS) isolates the payload bus from the remote terminals within ISPRs, at the Centre Aisle, or on an External Payload Adapter. The interconnection busses (called 'stubs') terminate at the ISPR UIP, at the Centre Aisle SUP, and at the ExPM.

These stubs are interfaced via ICS to the payload bus. The ICS contains two isolation resistors (one per wire) and an isolation transformer . The purpose of the data bus couplers is to prevent a short on a single stub from shorting the main bus.

5.6.4.2 PAYLOAD BUS PROTOCOL

Access to payload Remote Terminals (RTs) is possible via the RT bus interface protocol (also called RT protocol). The RT protocol is running on top of the MIL–1553B standard using the standard messages. The messages transmitted on the payload data bus shall be in accordance with the formats in Figure 5.6.4.2–1, Data Message Format. This figure shows all Bus Controller (BC) controlled data transfer types on the MIL–STD1553B bus. Each message format is made up of control words called command and status. Data words are used to encode communication between system elements.

The RT bus interface protocol is used for direct access to a remote terminal for commanding or acquisition of payload data (e.g. housekeeping data). This protocol adds to the existing MIL–1553B Standard APM specific communication methods, command and data representation. It is possible to transfer up to 32 data words within one transmission cycle by this protocol.

DaimlerChrysler Aerospace, Bremen – All Rights Reserved – Copyright per DIN 34

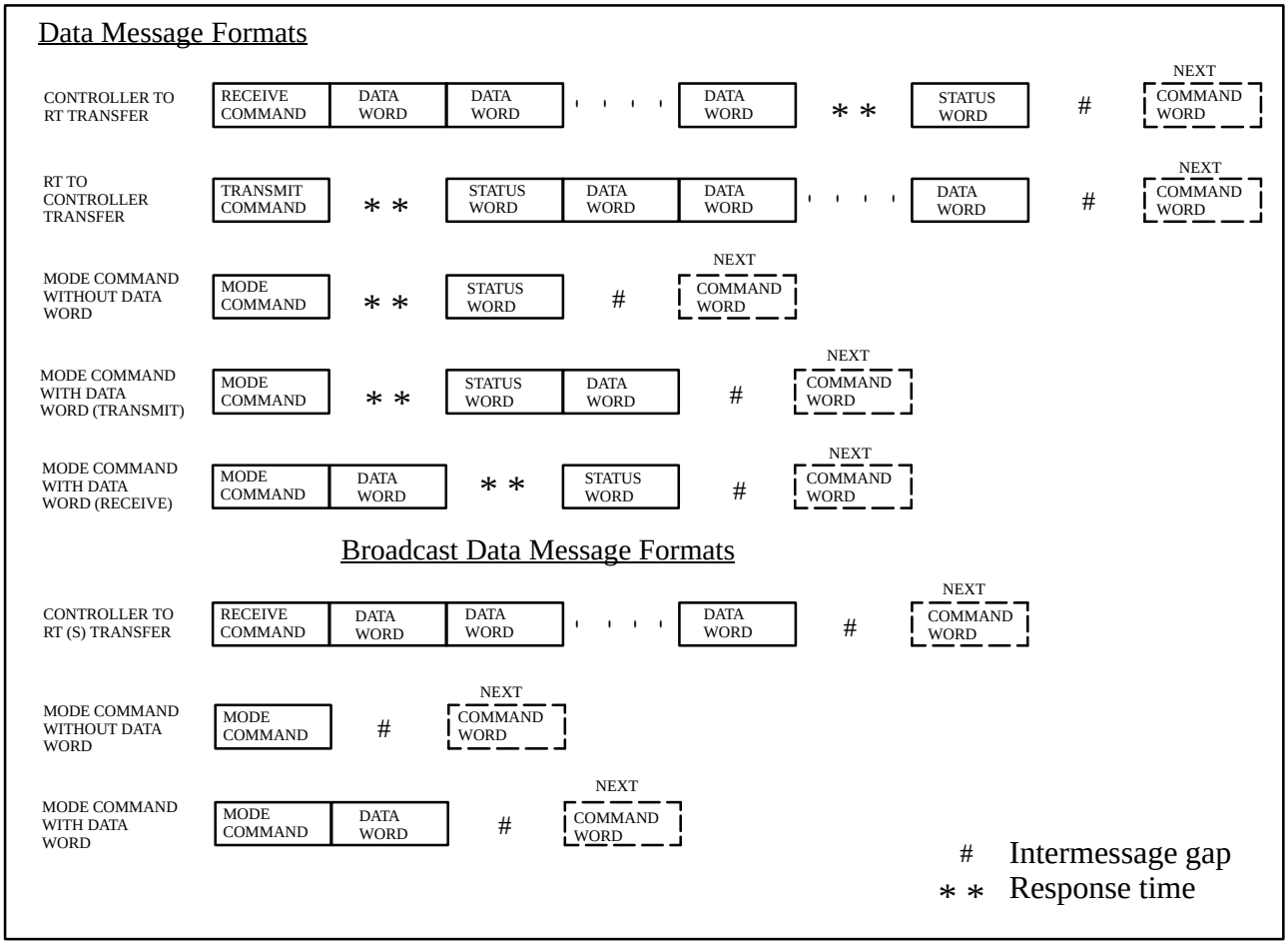

FIGURE 5.6.4.2–1 DATA MESSAGE FORMAT

5.6.4.3 RT PROTOCOL USAGE ON PAYLOAD BUS

The RT protocol should be used in those cases where the time homogeneity of the data on the payload bus is essential, e.g. to perform a correlation of data from different payload RT's.

All payload data which are cyclically acquired via the payload bus by the RT protocol are stored by the DMS acquisition service in the local or distributed part of the data pool. The acquisition service ensures the time homogeneity of the payload bus acquired data in the data pool. This allows further on–board processing, e.g. monitoring, calibration, FDIR, trend analysis and means analysis on consistent data.

DaimlerChrysler Aerospace, Bremen – All Rights Reserved – Copyright per DIN 34

Payloads should use the RT protocol for the following functions:

- Payload Health & Status data required by APM system for system operation
- Data acquisition validity status
- Data Wrap Messages
- Time message broadcast reception
- Mode Code commands
- Payload oversampling data (if required)

Payload dedicated application command and payload telemetry transmission can also be performed via the RT protocol if a payload does not implement a LAN interface. If a payload decides to implement a LAN interface, payload application commands and telemetry shall be transferred via the CCSDS protocol. The LAN capabilities are described in section 5.6.5 .

By using the RT protocol for acquired data to be processed by DMS services it will be avoided to generate CCSDS packets by the payload and to perform unpacking by the DMS. The DMS is able to generate telemetry packets from the data pool for those payload data which are required on ground.

5.6.4.4 PAYLOAD BUS PERFORMANCE AND PROFILING

The maximum data rate transmitted via the RT protocol is 90 kbps which can be used for commands and telemetry. The actual payload bus data throughput will be determined by the slot allocation (bus profiling) which depends on the payload complement. The bus profile has to be adapted when there is a change on the payload complement.

DaimlerChrysler Aerospace, Bremen – All Rights Reserved – Copyright per DIN 34

5.6.5 PAYLOAD INTERFACE TO APM LAN

5.6.5.1 GENERAL

The APM LAN is used for data exchange between the PLCU and other DMS processing nodes. The APM LAN is in addition used to provide the data paths from the DMS processing nodes to the APM PCS (Laptop) as the crew system interface.

Payloads may use the APM LAN for CCSDS communication with the APM DMS and the ground system. The payload shall issue CCSDS packets on the LAN via its Ethernet board. All CCSDS packets are transferred by the UDP/IP protocol on top of the Ethernet II protocol.

Two LAN interfaces (main and the redundant) are provided for each ISPR, SUP and ExPM.

The following application services based on the CCSDS protocol will be supported by the APM DMS on the LAN. It depends on the payload requests which of the services will be used:

- transmission of telemetry from a payload to the ground (APM–CC or USOC) via Ku–Band
- transmission of ground (APM–CC or USOC) commands to the onboard payload via S–Band; transmission of ground command responses from the payload to the ground system
- transmission of CCSDS packets (commands or data) between a payload and a PLCU SWOP in both directions
  –>this will be used for ancillary data requests from the payload to a PLCU SWOP, and transmission of the requested ancillary data from the PLCU SWOP to the payload
- transmission of CCSDS packets (commands or data) from a PLCU FLAP to a payload (opposite transfer direction is not possible)
- transmission of payload quicklook (housekeeping & science) data from a payload to a payload dedicated application on one of the system laptops
- transmission of Mastertimeline (MTL) commands to the payload and command acknowledgement (report) from the payload to the MTL

5.6.5.2 APM LAN CONCEPT

The APM LAN is an Ethernet network in accordance with 10Base–T and provides a star topology around a HUB. The network including the HUB is redundant. The network layer consists of the Internet Sublayers with the Internet Protocol (IP). Payload data will be transferred as CCSDS packets with the User Datagram Protocol (UDP). Each ISPR, centre aisle payload and ExPM may be connected via the Utility Interface Panel (UIP) , Standard Utility Panel (SUP) and Network Patch Panel (NPP) to the network. Figure 5.6.5.2–1 shows the communication protocol layers on the LAN.

DaimlerChrysler Aerospace, Bremen – All Rights Reserved – Copyright per DIN 34

CCSDS Path
UDP
IP
Ethernet II
10 Base T (IEEE 802.3)

FIGURE 5.6.5.2–1 APM LAN COMMUNICATION PROTOCOL LAYERS

Since the APM LAN is used on a shared basis by APM system data and payload data the accumulated payload related data traffic caused by the payload complement shall not exceed 1.55 Mbps. During mission preparation (timeline development) it is a scheduling task to ensure that the payload complement does not exceed the maximum throughput.

The two DMS HUBs are permanently on. If payloads implement two LAN interfaces, only one interface shall be active at the same time. When a loss of signal will be detected between the MMU and the HUB the DMS automatically configures to the redundant MMU. This reconfiguration is transparent for the payload because the redundant MMU will have the same Ethernet and IP address. The reconfiguration process will last less than 5 seconds. During the reconfiguration no packet transmission is possible.

Payloads shall observe if the link between the Payload and HUB is operational. In case of a HUB failure the payload is responsible to reconfigure to the redundant payload LAN interface, if any is implemented. An indication of the actually active LAN interface and the operational/non operational LAN status shall be transmitted by the payload as part of the health and status data via the MIL 1553B bus interface.

It is strongly recommended that Payloads implement a one failure tolerant LAN interface using two Ethernet boards for the nominal and redundant interface. In case payloads implement only one Ethernet board, they will lose their science telemetry and telecommand capability when there is an Ethernet card failure.

5.6.6 MMU DATA STORAGE AND RETRIEVAL

Payloads may use the on–board MMU for temporary storage of payload data like configuration files, onboard payload software files, application log files, and memory dump data.Those data can be transferred from ground to the onboard system, or vice–versa. The MMU shall not be used for storage of science data, and also not for temporary storage of science data.

The MMU is from the payload point of view a temporary storage device. The payload must have its own, rack internal storage device to be able to transfer data to and from the MMU.

The onboard file transfer shall be performed with the NFS protocol via the LAN interface. All file transfers will be controlled by an authorized ground station via file transfer control commands.

DaimlerChrysler Aerospace, Bremen – All Rights Reserved – Copyright per DIN 34

The MMU provides a partition of 100 MBytes for payload data for the total payload complement. The MMU acts as a NFS server where the payload acts as a NFS client. To get access to the MMU payload partition, the payload shall perform a mount command. The payload shall perform an unmount command to finish the MMU file access. The MMU mount/unmount will be controlled by the authorized ground station via mount/unmount control commands.

Due to the MMU fault tolerant design, the support of NFS requests may be pending during MMU master/slave switching. The expected switching time may be up to 2 minutes.

File transfers from the ground (APM–CC) to the onboard MMU and vice versa is system responsibility, and will be done by the Operational File Transfer (OFT) protocol.

5.6.7 APM MASTER TIMELINE (MTL)

The MTL can be defined as a list of scheduled (i.e. for which a start time has been defined) activities and contains the APM portion of the ISS Onboard Short Term Plan (OSTP) and APM private activities. An activity defines a set of time tagged entries that can be manually or automatically executed. A particular entry may represent a payload command, automated procedure, end item command, crew procedure or an action to be performed manually by the flight crew. The crew and ground personnel will use the MTL to manage all APM non–critical system and payload operations.

For payload operations the MTL may be used to initiate payload dedicated CCSDS commands to the payload LAN interface, or to start a dedicated PLCU FLAP which sends one or several MIL Bus commands to the payload. Configuration, setup, and modification of the MTL is system (APM–CC) responsibility, also in case of payload commands to be initiated by the MTL.

The MTL itself is running on the MMC, but the MTL viewer as the crew interface is running on the laptop.

The planning for the ISS will follow a distributed concept involving each international partner and payload user. The incorporation of inputs, their priority and the balancing of requests has to be performed in coordination between POIC, SSCC, APM–CC and other element / user centres.

The result of the planning process will be an integrated station plan which will be uplinked on the US side as OSTP and on the APM side as the MTL. The MTL is actually an APM specific subset of the OSTP which allows for independent execution of APM timelined activities, whilst maintaining the overall plan management as a centralized function.

The MTL processor software supports control as well as editing operations from Ground and SSMB, and provides reports to Ground and SSMB on the status of the execution of MTL entries/activities. The MTL file is stored central and supports both MTL execution and display on the APM laptop. Entries may be configured to undergo a System Command Check (SCC) before execution. Entries which have passed system checks are sent by the MTL application to the final on–board executor via the DMS services. Feedback via the DMS is provided to the MTL application from the receiver of the commands, e.g. APs, payloads.

DaimlerChrysler Aerospace, Bremen – All Rights Reserved – Copyright per DIN 34

The main MTL functions are:

- Execution of time tagged commands (e.g. APs, crew procedures, payload CCSDS commands, DMS S/W commands)
- Receive command feedbacks to evaluate the final entry / activity status
- Start/ Stop MTL execution
- Add/ Delete activities
- Edit activities and entries
- Cyclic (repetitive) execution of MTL entries
- Notify crew of planned manual actions
- Provide data for crew display to reflect MTL status
- Status report to indicate new activity status (MTL events)

5.6.8 LAPTOP PROVIDED SERVICES FOR PAYLOADS

This section describes services which are provided onboard by the APM Laptop to support payload operations.

Software commands to start payload dedicated FLAPs, displays, Crew Procedure Language (CPL) procedures and the MTL viewer in the APM Laptop are available for payload use. Specific Payload displays and associated Payload applications, and command definitions (mapping of SW commands) will need to be added as part of the Payload integration using the tools provided.

5.6.8.1 MTL VIEWER

The MTL Viewer provides the capability to monitor the execution of the MTL. The APM Flight Crew access to the MTL is passive via the APM PCSs. They are able to freely select and manipulate the MTL data for display purposes but cannot change the data or control MTL execution. Crew input is required only to select the way in which data is displayed, to input / update annotations, to start activities with a trigger mode set to manual, or to indicate that a manual entry has been completed. MTL edit and control capabilities (e.g. Add Activity, Delete Activity, MTL Stop) are commanded by Ground or via the SSMB.

The Crew is required to advise when an MTL Manual Entry has been completed in order that the MTL Entry status can be updated accordingly.

DaimlerChrysler Aerospace, Bremen – All Rights Reserved – Copyright per DIN 34

The APM Flight Crew will be able to perform the following operations:

- View all or portions of the MTL according to combinations of crew provided selection criteria's (e.g., crew member identifier, time window, location, acitity filter)
- View the APM MTL Executor execution status i.e. running, in hold, or stopped (all or APM or OSTP portion)
- View the data related to each activity
- View the entry–set related to a selected Activity
- View the data related to each entry
- View execution notice of a selected Activity
- Scroll up and down through the displayed MTL Activities
- Select an Activity by selecting its graphical representation
- Scroll up and down through the entry–set related to a selected MTL Activity
- Select an entry by selecting its graphical representation
- Provide and maintain crew made annotations related to MTL activities.

The APM Laptop will display the MTL in a graphical, bar chart format, with each MTL activity shown as a horizontal bar on the chart. Each activity is a composition of MTL entries which are commands. MTL Entries, which consist of identifiers, scheduled duration, execution status, etc., can be displayed as a subgroup of the related activity. Each entry will be displayed as an arrow where entry duration is negligible (e.g. command sending) or as a horizontal bar. For display at MTL Entry level, the corresponding activity is always displayed as a summary bar on the chart.

Additional MTL information, e.g. activity status, trigger mode etc., will be conveyed using a combination of colour coding and text.

APM Ancillary data will be displayed in a dedicated area beneath the MTL View display. A solid vertical line will be used to indicate time passing.

Figure 5.6.8.1–1, MTL Sorted by Operator, provides an example of possible output from the MTL Viewer. It shows a view of MTL Activities sorted by assigned operator.

DaimlerChrysler Aerospace, Bremen – All Rights Reserved – Copyright per DIN 34

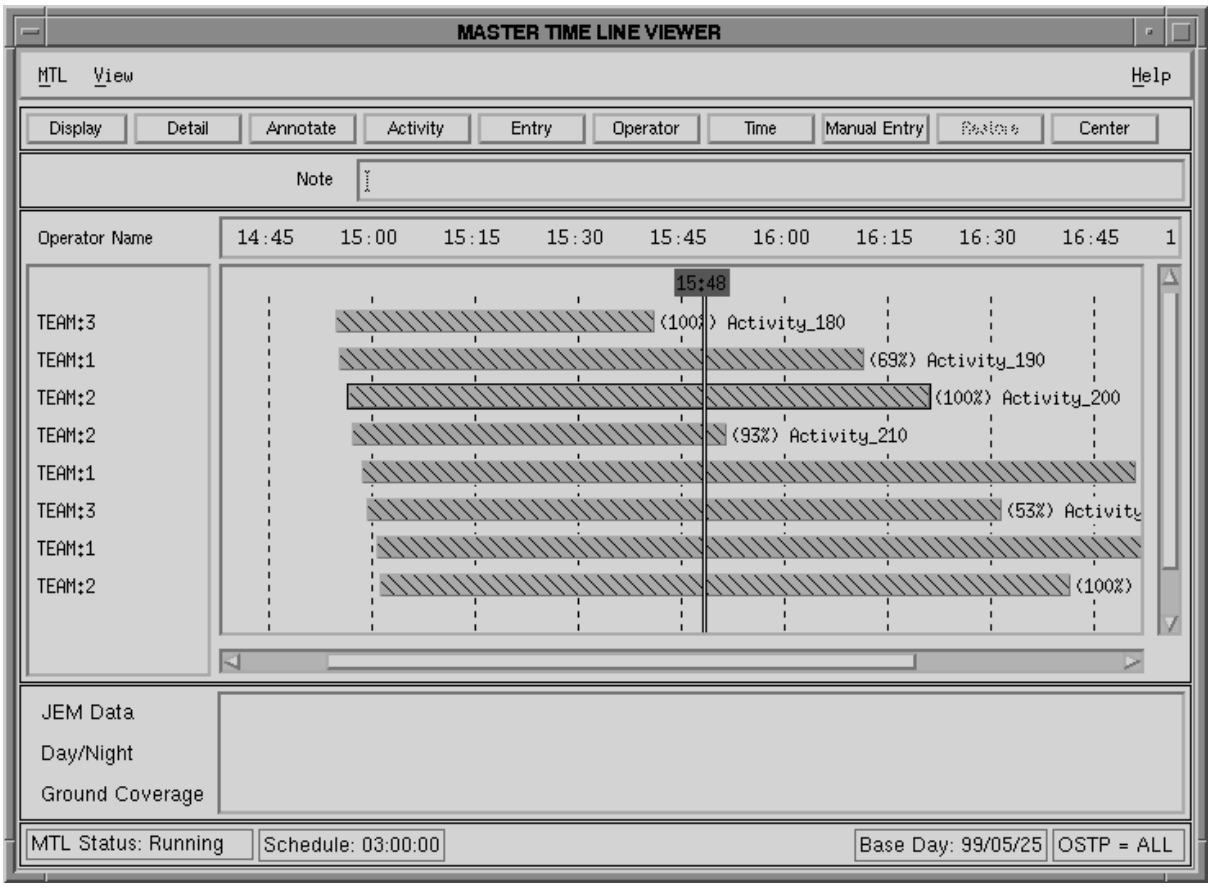

FIGURE 5.6.8.1–1 MTL VIEWER

5.6.8.2 MONITOR CONTROL DISPLAY EXECUTOR

Monitoring and Control displays will be generated for payloads on the APM system laptop by the Payload Mission Integrator (PMI). The PMI will generate the displays based on information provided by the Payload Developer. The displays will be used to monitor the health and status data of each payload, or to trigger essential payload commands.

The Monitor and Control Display MCD Executor (or Synoptic Display Executor) allows the crew to interact with Synoptic Displays. The Synoptic Displays are displayed on the LAPAP Laptops (up to 8 Synoptic Displays per LAPTOP).

MCD Executor is a data server application, not directly visible to the crew. MCD Executor cyclically acquires data from other subsystems via the DMS software and shows them to the crew in the form of a preconfigured Synoptic Display.

DaimlerChrysler Aerospace, Bremen – All Rights Reserved – Copyright per DIN 34

The Synoptic Displays are based on the COTS product SAMMI from Kinesix. The Synoptic Display are format file (`*.fmt` file) that are prepared on ground. The MCD Executor shall then be responsible for serving each prepared display upon its appearance with the specified data under real-time constraints during execution. Navigation within the provided display hierarchy shall be explicitly provided by the designer of the synoptic displays.

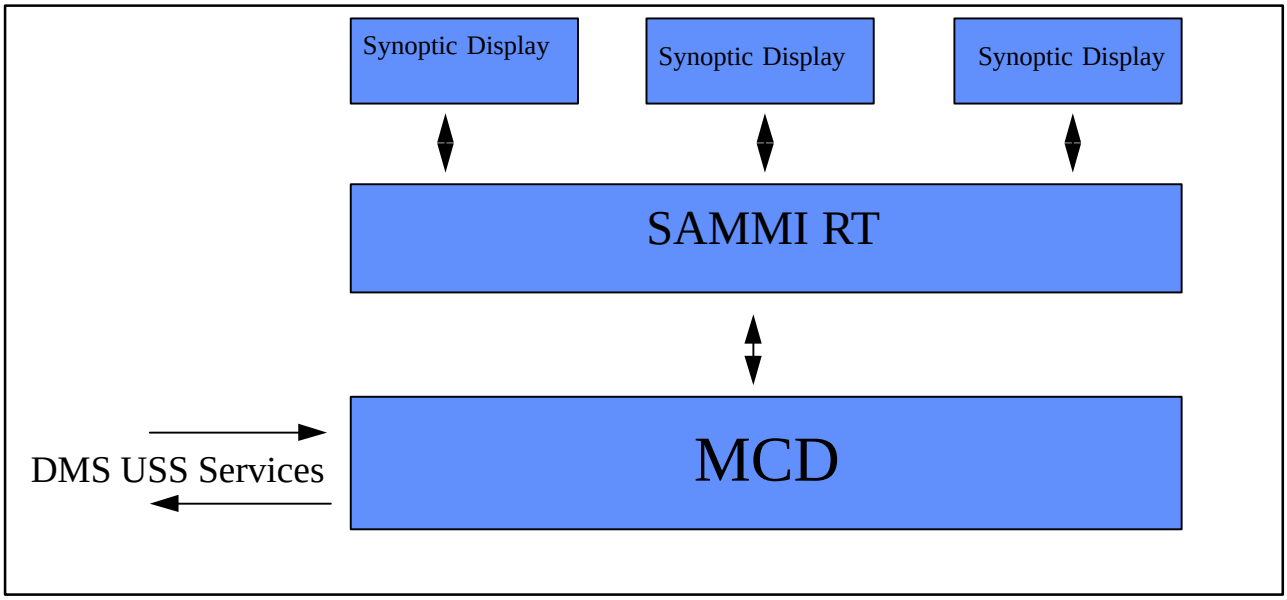

FIGURE 5.6.8.2–1 GENERAL OVERVIEW MCD EXECUTOR

5.6.8.3 CREW SUPPORT DOCUMENTATION TOOL

The Crew Documentation Tool will allow the Flight Crew to view the documentation stored in the APM Laptop mass memory. A hyper–link look&feel documentation browser is provided which makes information retrieval efficient and easy. Using this tool the crew member will be able to select the appropriate documents (or document sections) and then trace the subject from one part of the crew documentation to another by use of a series of highlighted subject keywords embedded within each document.

Currently the NETSCAPE 4.0 COMMUNICATOR as HMTL based system will be used to meet these Laptop HCI requirements.

In addition to document viewing, the crew member also has the option to create, remove and update document annotations. Annotations might be required, e.g. to record some additional practical details about an experiment acquired during previous runs.

The onboard manual crew procedures shall be accessible through the crew support documentation tool. Flight procedures for payload operations shall be prepared in accordance with reference documents 2.2.15 and 2.2.16.

DaimlerChrysler Aerospace, Bremen – All Rights Reserved – Copyright per DIN 34

5.6.8.4 AUTOMATED CREW PROCEDURES

The crew will conduct their day to day operations using crew procedures, which will cover nominal system and payload reconfiguration and maintenance operations as well as non–nominal situations to recover and stabilize the system.

The APM Laptop capability to interpret Automated Crew Procedures (ACPs) written as a Crew Procedure Language (CPL) script will be addressed in section 5.6.8.4.1. This section discusses the interface provided to the crew member to allow the processing of script and logic flow format procedures under crew control.

ACP has four different representations. These are the source code (as entered by the developer), the processing code (as interpreted onboard and not visible by the crew), the presentation code (a textual display format) and the LFD (the Logic Flow Diagram display format). The crew will interact either with the presenatation code, or with the LFD.

The Presentation Code is a more readable version of the processing code. Information not necessary for crew interpretation of the script (e.g. declaration and cross reference information) are removed and all references to MDB pathnames in executable CPL statements are replaced using a more meaningful local name, i.e. alias name, if so defined. An example of the ACP Presentation Code format is shown in figure 5.6.8.4–1, Example Presentation Code Diagram.

The Logic Flow Diagram is a graphical representation of the ACP, where a combination of boxes, lines and rhombuses are used to represent the ACP control flow. An example of the ACP LFD format is shown in figure 5.6.8.4–2, Example LFD Diagram.

The ACP display will trace execution of the script by highlighting the current step as a highlighted command instruction and then ‘ticking‘ off the step when it is completed.

DaimlerChrysler Aerospace, Bremen – All Rights Reserved – Copyright per DIN 34

```
        check of pump 1:
☑ 10        SHOW    Waterpump 1
☐ 11        CREW ACTION "Check Temperature of Input Flow"          DONE ☐

☐ 13    CREW DECISION  "Is Temperature of Input Flow above 100 º?"  ☐
  14    IF CREW ANSWER = yes THEN
            set higher speed:
☐ 16        CREW INPUT  "Value for Speed?"; new_speed  ☐
☐ 17          – Waterpump 1  –set speed (speed => new speed)  —rotations/minute
☐ 18        CREW ADVICE  "Wait until Pump has reached new speed"   ACK ☐
  19    ELSE
            set nominal speed:
☐ 21          – Waterpump 1 – set speed (speed => 85.5)   —rotations/minute
  22    END IF

        STOP finishing:
☐ 25        CREW ACTION  "Close the display of the Waterpump 1!"   DONE ☐
```

FIGURE 5.6.8.4–1 EXAMPLE PRESENTATION CODE DIAGRAM

DaimlerChrysler Aerospace, Bremen – All Rights Reserved – Copyright per DIN 34

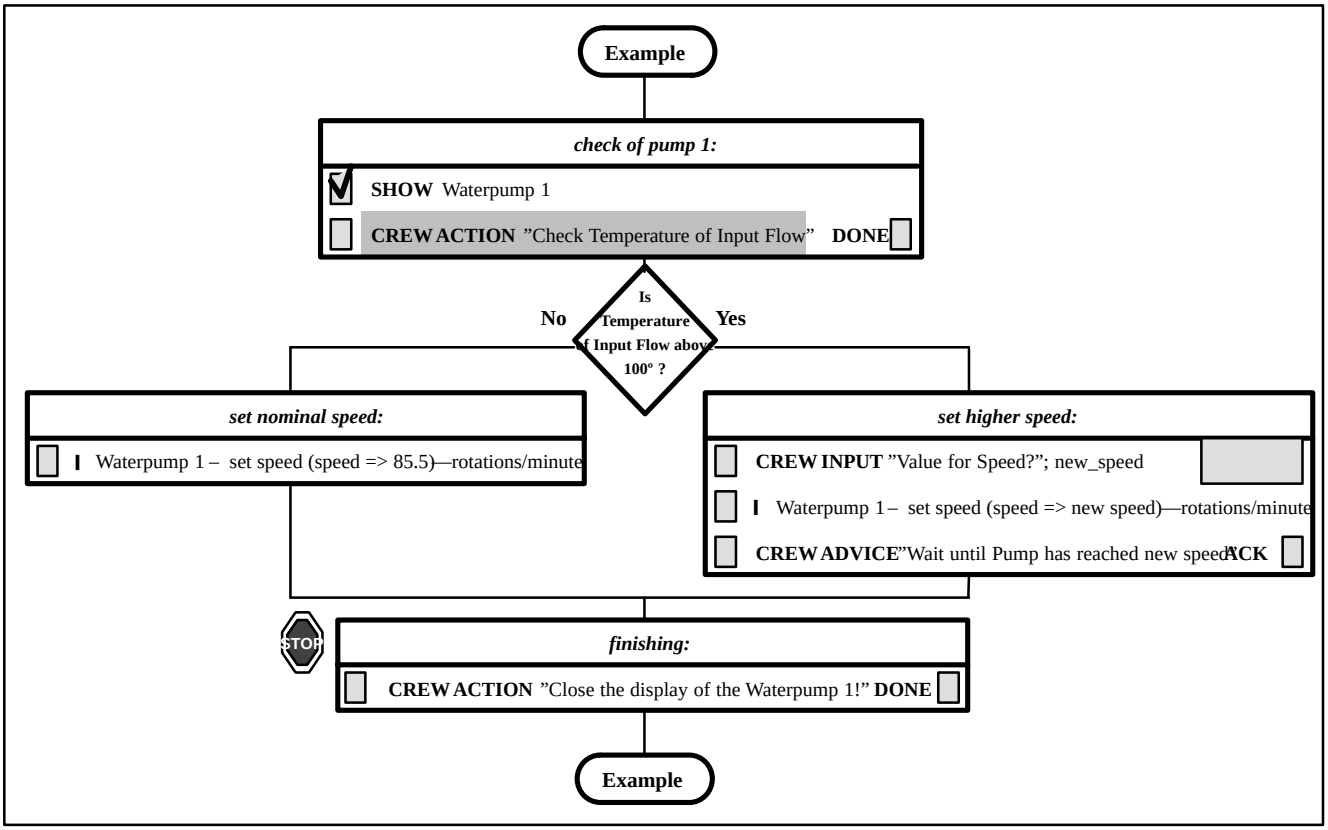

FIGURE 5.6.8.4–2 EXAMPLE LFD DIAGRAM

5.6.8.4.1 CREW PROCEDURE LANGUAGE

An Automated Crew Procedure can involve both manual and automatic steps, and each Crew Procedure Language (CPL) Script (i.e. the implementation of a Crew Procedure) can be thought of as a sequence of CPL Statements.

The APM Laptop will provide a CPL Interpreter which will translate CPL statements into automatic opening of synoptic displays, starting of UCL procedures, APM SW Commands and can include manual procedure steps.

A CPL Script has the following basic language constituents:

- Declarations, i.e. the definition of Variables and Aliases
- Control Flows, i.e. Script, If..then.. Else, Stop and End statements
- Executable Lines, i.e. Start, Execute, Crew_Input procedures, Send, Show,Open, Crew_Advice and Crew_Action.
- Cross Reference, i.e. to map MDB pathname to the onboard SID (short identifier) and to map this CPL Script to its related HELP information.

A hypothetical CPL Script example is illustrated in Figure 5.6.8.4.1–1, Example CPL Script.

DaimlerChrysler Aerospace, Bremen – All Rights Reserved – Copyright per DIN 34

```
SCRIPT example

    ALIAS Waterpump_1 = \APM\TCS\DISPLAYS\PUMP_1
    ALIAS Waterpump_1.set_speed = \APM\TCS\APs\SET_SPEED_PUMP_1

VARIABLE new_speed : real;


    check_of_pump_1:
            SHOW (Waterpump_1)
            CREW_ACTION (”Check Temperature of Input Flow”)

CREW_DECISION (”Is Temperature of Input flow above 100 ?”)
IF CREW_ANSWER = yes THEN
    set_higher_speed:
            CREW_INPUT_REAL ( new_speed)  — rotations/minute
            EXECUTE (Waterpump_1.set_speed (speed => new_speed)) — rotations/minute
            CREW_ADVICE (”Wait until Pump has reached the new speed”)
ELSE
    set_nominal_speed:
            EXECUTE (Waterpump_1.set_speed (speed => 85.5)) — rotations/minute
END IF

finishing:
    CREW_ACTION (”Close the display of the Waterpump 1”)

END example
HELP ”–keyword Waterpump1”
\APM\TCS\DISPLAYS\PUMP_1 = 508973
\APM\TCS\APs\SET_SPEED_PUMP_1 = 10987
```

Declaration part

Block with executable statements

Control flow (Crew decision)

Block with executable statements

Block with executable statements

Block with executable statements

Cross Reference

FIGURE 5.6.8.4.1–1 EXAMPLE CPL SOURCE CODE

The CPL Script in the example is shown in processing code format i.e. the version held onboard for processing. For display purposes, this code is stripped of all support information (e.g. ALIAS declarations / HELP referencing) and MDB pathnames are presented in their more meaningful ALIAS format. The crew member can then view this presentation code in either text or LFD (Logic Flow Diagram) format.

5.6.8.4.2 AUTOMATIC CREW PROCEDURE EXECUTOR

The Automatic Crew Procedure (ACP) application ***ACP Executor*** allows the crew to select and start an Automatic Crew procedure. A crew procedure is written in Crew Procedure Language (CPL) and it can contain instructions to the crew (“manual commands”) and commands to be sent to other subsystems display (“automatic commands”)—eg, to show a Synoptic Display.

The ACP Executor provides the crew with a front-end viewing window for each automated crew procedure, managed by the ACP Viewer. Crew input (control & monitoring commands) is acquired by the front-end viewing window and issued to the ACP Interpreter. The ACP Interpreter executes step-by-step the CPL statements from the script giving feedback information to the front-end viewer window. Dependent on the executing statement, procedure calls to show Synoptic Displays, UCL procedure calls (FLAP Calls), APM SW commands may be generated. Also dialogues will be issued when manual steps are involved by the crew.

DaimlerChrysler Aerospace, Bremen – All Rights Reserved – Copyright per DIN 34

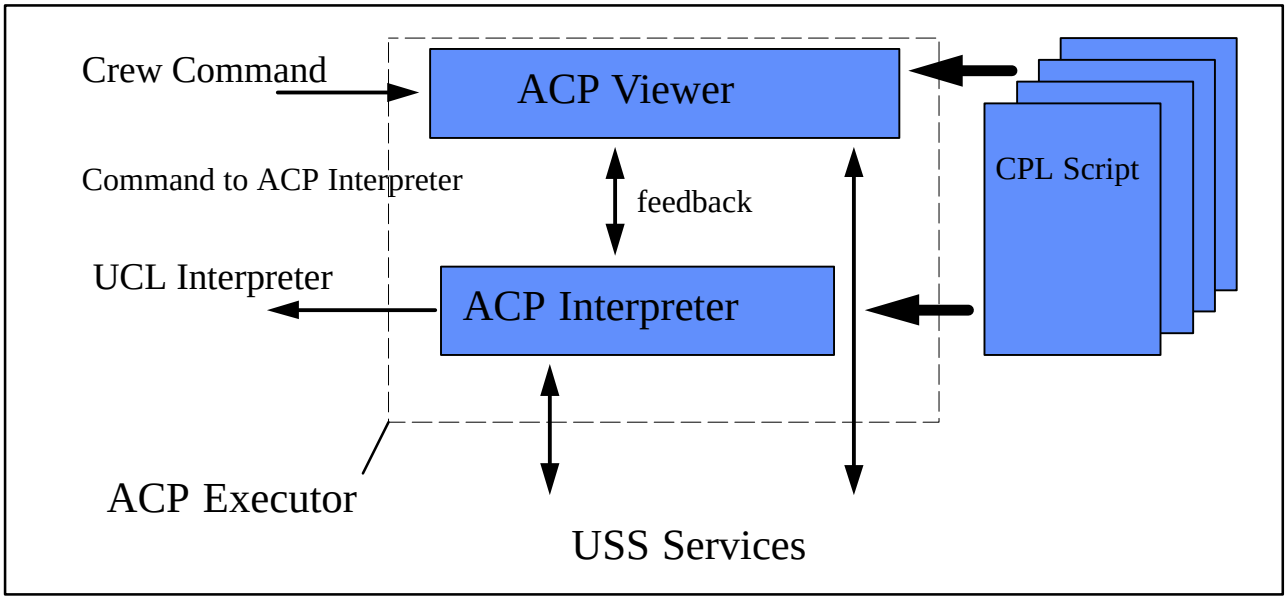

FIGURE 5.6.8.4.2–1 GENERAL OVERVIEW ACP EXECUTOR

5.6.8.5 PAYLOAD APPLICATION INITIATION

A payload directory on the Laptop APM Root Window allows to identify up to 50 Payload S/W applications. Each application is represented by a dedicated icon. If one of these icons is selected, the dedicated payload application (quicklook data visualization) is executed. The payload application development is a payload developer responsibility and beyond the LAPAP S/W responsibility, respectively control.

5.6.8.6 FLAP LAUNCHER

The LAPTOP FLight Automated Procedure (FLAP) Launcher allows the user to run the FLAP. Through the panels the operator can select the FLAP name and additional parameters. The Application provides also, the input check of the parameters used.

The following capabilities are provided:

- **FLAP Name** (Through a push-button a FLAP Naming panel can be opened covering the FLAP names. The panel will allow the Crew via a navigation method to select the FLAP that has to be launched.)
- **Parameters** (Through text fields specific parameter values can be inserted.)
- **Launch FLAP (**Through a push-button the previously selected FLAP will be launched.)
- **HELP (**Through a push-button information about the usage of the FLAP Launcher can be obtained.)

DaimlerChrysler Aerospace, Bremen – All Rights Reserved – Copyright per DIN 34

5.6.8.7 NOTIFICATION MANAGEMENT

The Notification Management facility announces notifications generated by an event in the dedicated System Message Panel. An event can be initiated by an exception moniroting violation, by a SWOP, or a FLAP. The displayed notification messages consist of a message string.

The Notification Management facility also provides for a “History” push button which, when activated, pops up a region (History Panel) containing the latest 100 notification messages.

In both windows each notification message can be acknowledged by just clicking on it with the Select pointing device button. After this action the application will inform the DMS of the event, that in turn will inform all Notification Management applications running on the plugged LAPTOPs that the message has been acknowledged.

5.6.8.8 ANNOTATION SERVICE

The Annotation Service provides a facility to manage the annotations associated with documentation, MTL activities and entries, ACP scripts, and synoptics. New annotations can be added and existing ones can be modified or deleted using specific facilities. Within ACP scripts an annotation can be added to each block of CPL statements. As part of the crew documentation tool an annotation can be added to each document component, where annotations within MTL can be added to each activity.

5.6.8.9 MONITORING LIMITS DISPLAY

The Monitoring Limits Display allows the crew to see the current monitoring limit sets of a selected datapool end-item, belonging to selected monitoring table. In addition it provides also the capabilities to:

- switch between active/passive monitoring limit set;
- enable/disable the monitoring status of an end item.

5.6.8.10 ON-LINE HELP

An On-line Help facility is provided to support the users on accessing, using, and managing of the LAPAP capabilities themselves and to support the user to understand the correct way to operate on the APM System via the LAPAP, reduce errors and ease recovery. The On-line Help is context sensitive and available in parallel with other displays. The HELP information are stored as part of the Crew Documentation .

5.6.8.11 HUMAN COMPUTER INTERFACE (HCI)

The onboard HCI is designed and implemented following the APM Flight HCI Standard. The standard is based on the OSF Motif Standard, with extensions to cover space specific items and the APM specific HCI applications. OSF Motif is an internationally accepted and supported HCI style.

DaimlerChrysler Aerospace, Bremen – All Rights Reserved – Copyright per DIN 34

There is no specific requirement for a common look and feel across all HCI of the ISS. Instead it has been accepted as a design goal.

The basis for the common agreement on the FHCI is the ISS FHCI White Paper. The European commitment to implement the White Paper is reflected in the APM Flight Human Computer Interface Standard (reference document 2.2.7). This document follows the same layout as the White Paper and copies the current guidelines in the paper. In addition some APM specific requirements are included.

As far as synoptic displays are concerned, the Display Graphic Communication Standard (DGCS) is followed up to an extent which can be achieved by the SAMMI synoptic display development and execution tool.

HCI is implemented on X–Windows, an internationally accepted and supported standard, providing a net transparent I/O service for the output of windows, text and graphics on bitmapped workstations and for input with keyboard and pointing device X–Windows based SW is transportable between different workstations. The HCI SW architecture is shown in Figure 5.6.8.11– 1, HCI SW Architecture.

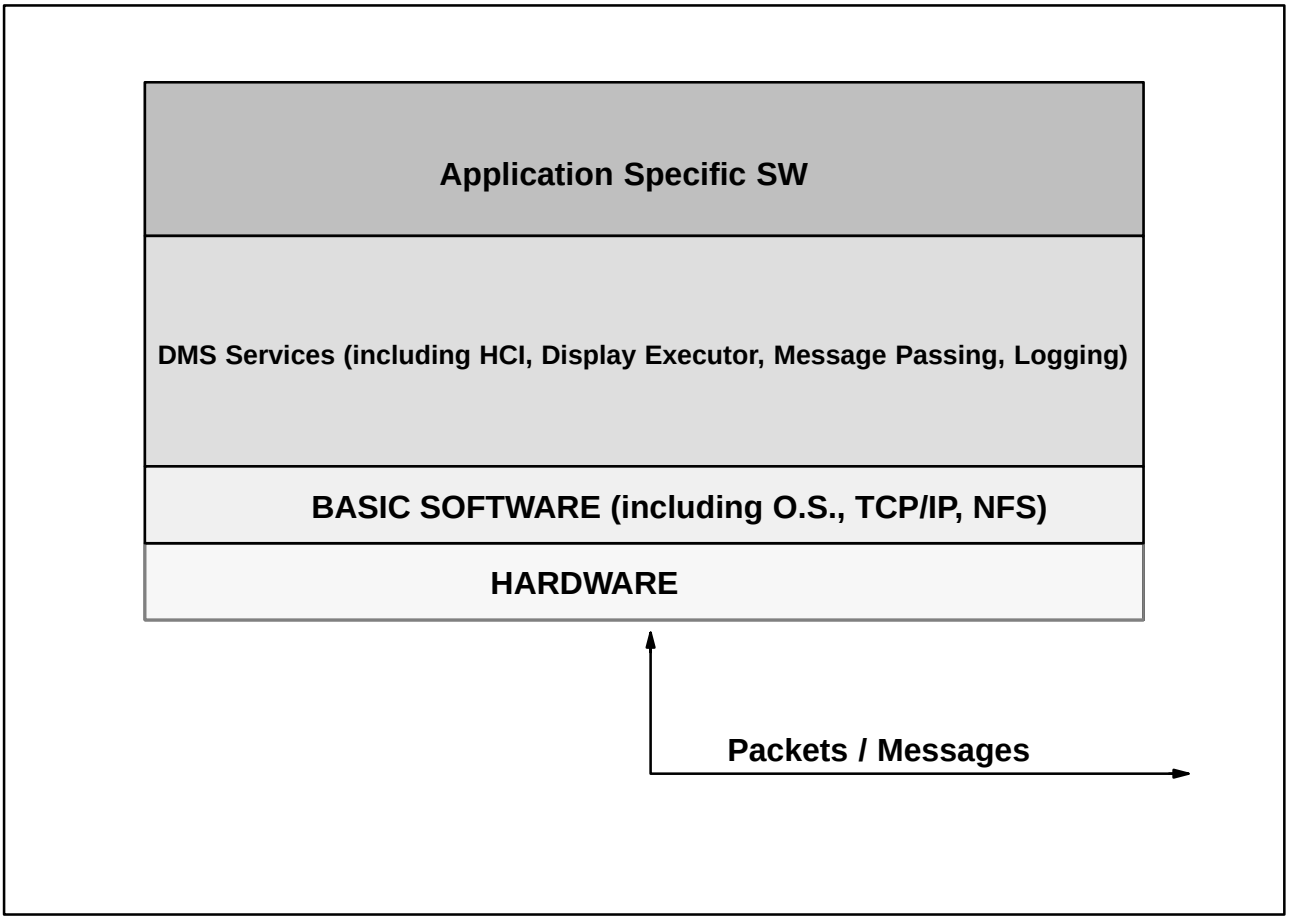

FIGURE 5.6.8.11–1 HCI SW ARCHITECTURE

DaimlerChrysler Aerospace, Bremen – All Rights Reserved – Copyright per DIN 34

5.6.8.11.1 SYNOPTIC DISPLAYS

Synoptic displays will be used to present data for the System and Payload monitoring and control.

The synoptic displays will consist of a graphical representation of system or payload functions down to unit level. This type of display serves a two–fold purpose:

- it provides a mechanism to readily find, select and initiate commands, and
- it provides the capability to display system and payload stati in the same window as that used for commanding (i.e. the simultaneous display of commands and stati).

The Laptop Application (LAPAP) software provides the capability to connect commands and APs to Laptop HCI window buttons for execution on button selection. Commands and Automated Procedures (AP) that relates to display items have to be defined if there are any required for payload operations. Automated procedures are programs written in UCL, compiled on ground and interpreted by the UCL interpreter in the PLCU.

The crew interface is completely predefined on ground which assures that no errors for command input are possible on–board. Synoptic displays are defined on ground using the Flight Windows Definition Utility (FWDU) in accordance with the APM Flight HCI Standards.

Synoptic Navigation (i.e. movement up and down through the hierarchy of available synoptic displays), will be achieved using the dedicated Synoptic Navigation capabilities provided by each synoptic display.

The following prerequisites are necessary to perform data visualization:

- Definition of the end items to be displayed.
- Definition of the end items to be commanded.
- Definition of flight displays. The displays can make use of MDB contained procedures and commands.
- Generation of automated procedures and commands that relate to display items.

5.6.8.11.2 PAYLOAD DISPLAY REQUIREMENTS

Payloads may require specific synoptic displays to be defined in support of crew operations on the APM System Laptop. For payloads synoptics displays will be generated by the payload mission integrator to display the payload health and status data. The data required to support the payload specific synoptic displays will be acquired by the PLCU. This data will be placed in the onboard data pool, which is then automatically available on the Laptop computer. The HCI software then has access to the data just as it does for the system synoptic.

DaimlerChrysler Aerospace, Bremen – All Rights Reserved – Copyright per DIN 34

The conversion of acquired payload raw values into engineering values will be done by the DMS service. For the conversion definitions in the MDB, e.g. calibration coefficients, are necessary. The raw values are then automatically calibrated when reading the desired values from the data pool.

DaimlerChrysler Aerospace, Bremen – All Rights Reserved – Copyright per DIN 34

5.6.9 REQUIREMENTS FOR PAYLOAD PROVIDED PRIVATE LAPTOPS DIRECTLY INTERFACING PAYLOAD PROCESSORS

In order to minimise the number of laptop computers present on board, and make efficient use of onboard spares, the Payload Developer (PD) shall have as design goal the use of a laptop based on the same hardware as the APM system laptop.

No connection of the private payload laptop either to the APM Payload bus or the APM LAN is allowed. ▮

Displays shall be developed according to the multi–lateral ISS Display and Graphic Commonality Standards (reference document 2.2.14). Cross–payload display commonality will simplify crew training and streamline flight payload operation.

DaimlerChrysler Aerospace, Bremen – All Rights Reserved – Copyright per DIN 34

5.7 VIDEO PROVISIONS FOR PAYLOADS

5.7.1 GENERAL

The APM video/data distribution system comprises an internal redundant Video/Data Distribution Unit (VDPU), two system Video Camera Assemblies (VCA), two system Video Monitors (VMN) and two cold redundant Video Cassette recorders (VCR). The nucleus of the system is the Video/Data Processing Unit (VDPU) which controls the video distribution and processing. Figure 5.7.1–1 describes the overall system and the major components.

The APM system provides a video system which allows the distribution of video signals via fibre optics lines from/to ISPRs and SUPs, and the processing of payload video, onboard recording, onboard display and downlinking. For transmission to ground the video system provides digitization of video signals and subsequent compression on the basis of MPEG II standard. For payload support there is also a frame grabbing function to allow the transmission of full resolution pictures. The payload video signals are PF modulated and the signal format is defined in E/A–RS 170A, color NTSC standard .

US payloads hosted in the APM may use the video provisions in the APM as display of video on the APM system video monitors, routing to the SSMB for processing in the US–Lab, routing of video data to the ground. The usage of APM video system resources has to be precoordinated between APM–CC, POIC and SSCC.

The video interface between the APM and SSMB carries 2 video channels into the APM from SSMB and 2 video channels out from the APM to SSMB. Two video synchronization and control signals are also sent to the APM from the SSMB for control of the APM video camera assembly from SSMB. Video signals are compatible with video signal standard E/A–RS–170A.

All APM video signal sources (including payloads) shall use the APM system Sync Signal provided at the Utility Interface Panel. The utilization is mandatory for the video compressor in the VDPU.

In addition to the video distribution the fibre optics network allows the distribution and routing of high rate data. (for details see chapter 5.9.1).

DaimlerChrysler Aerospace, Bremen – All Rights Reserved – Copyright per DIN 34

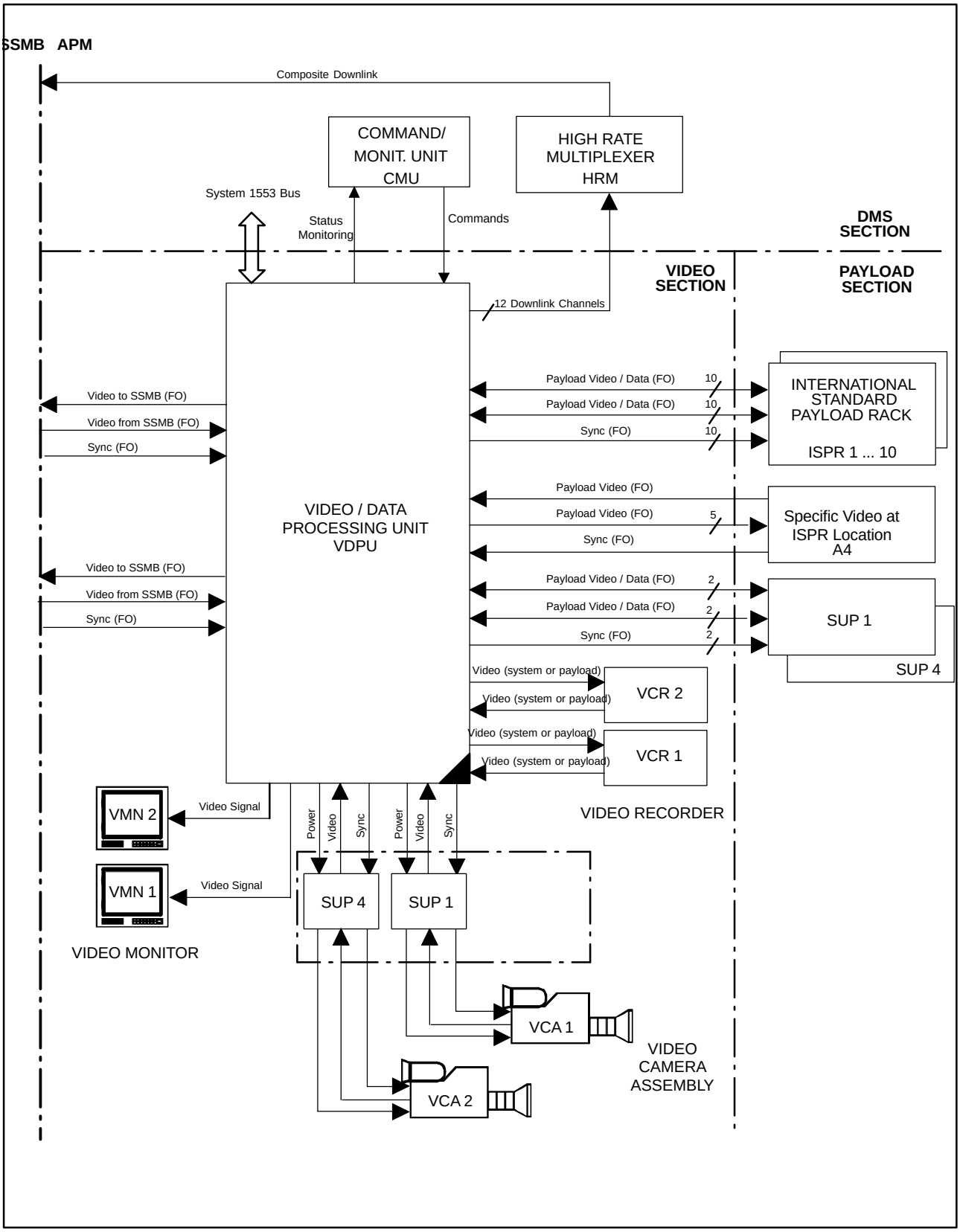

FIGURE 5.7.1–1 APM VIDEO SYSTEM DIAGRAM

DaimlerChrysler Aerospace, Bremen – All Rights Reserved – Copyright per DIN 34

5.7.2 VIDEO / DATA PROCESSING UNIT

All APM video sources are selected, processed and routed by the Video/Data Processing Unit. The Fibre Optic (FO) Pulse Frequency Modulated (PFM) payload video from ISPRs and center aisle payloads can be routed:

- to SSMB for downlinking via SSMB TDRSS.
- to the SSMB for display, recording, processing, etc.
- to one of the two APM colour monitors (VMN) for display.
- to one of the two APM system video recorders (VCR) for recording/ playback (one recorder is cold redundant)

In parallel four video signals can be processed by the VDPU. One signal can be routed to ground, two signals can be routed to the VMNs, and one signal can be recorded.

From the APM provided onboard Video Camera Assemblies (VCA) video signals can be generated in case specific payload operations require video observation. This will be provided on the basis of the required VCA functions in EIA–RS–170A, NTSC video signal standard.

Furthermore the VDPU allows for downlink bandwidth economy reasons the compression of one selectable video signal by selectable compression rates, commandable in discrete steps.

Only one video signal, either from system or payload, to a VDPU input can be compressed at a time by the VDPU compression unit and distributed to the HRM. Principally it would be possible to transmit more than one digitized compressed video signal in parallel via the HRM but in this case a video digitization and compression function / equipment would be required on the payload side. In this case the payload digital video signal will be routed by the VDPU to the HRM just as a bitstream.
The VDPU video compression is performed according the MPEG–2 Standard. The selected mode is ”Main Profile/ Main Level” determined by the selected hardware. The compression factor corresponds to the output bit rate which ranges from 1 Mbps to 32 Mbps in steps of 1 Mbps. The VDPU compressor output data rate is commandable by the APM system.

A frame grabber, as part of the VDPU compression function, allows the transmission of single selectable pictures or permanent pictures to ground with full NTSC resolution.
In permanent frame grabbing mode the VDPU transmits every Nth full NTSC video picture with the original resolution continuously. The number N of transmitted pictures corresponds to the preselected output data rate.
In single picture frame grabbing mode the VDPU transmits only one selected full NTSC video picture with the original resolution. The picture will be transmitted corresponding to the preselected output data rate.
The different frame grabbing modes are controlled by system commands.

DaimlerChrysler Aerospace, Bremen – All Rights Reserved – Copyright per DIN 34

The VDPU provides a time tagging function by using the GPS clock for time tagging purposes. The GPS is superimposed into the video to be recorded. The GPS characters will appear on the video screen as part of the video picture/ signal.
In addition, a video time tag (imposed GPS) can be included into the video picture (line 15) before compression and transmission to ground.

Payload telemetry may not be interleaved in the vertical blanking interval of the video signal. Only video system data are interleaved.

The VDPU is controlled by APM system commands via the APM system MIL bus.

5.7.3 VIDEO RECORDER

Two Video Cassette Recorders (VCRs), compatible with the NTSC synchronization scheme, are available in cold redundancy for recording/ play back of payload and system video signals. The recording format is Hi–8 (high band) on 8 millimeter type tape cassettes. The VCR supports the use of 120 minutes tapes which will be exchanged by the crew when required. Payload and System recording and playback sessions will be scheduled according to the APM Master Timeline.

The VCRs allow storage of PFM NTSC video but not the storage of digitized video data.

Control and monitoring of all VCR functions is possible by the APM system via the system MIL bus and by manual local control. The VCR parameters which indicate the VCR status are part of the system telemetry which will be send to ground.

5.7.4 VIDEO MONITOR

Two Video Colour Monitors (VMNs) are available to display NTSC analog video baseband signals. The VMNs support camera adjustments, on–board quality control of video scenes and display of video signals received from SSMB.
The VMN TFT display diagonal is 10.4 inch with a height to width ratio of 3 to 4. Only manual control of the VMNs is foreseen.

DaimlerChrysler Aerospace, Bremen – All Rights Reserved – Copyright per DIN 34

5.7.5 VIDEO CAMERA ASSEMBLY

The video system allows the connection of the two onboard Video Camera Assemblies (VCA) at the Standard Utility Panels (SUPs) 1 and 4 in the lower stand–off. The system cameras will use a different SUP connector than the payload video connector. The system cameras will receive 28 V power and the sync signal, and will transmit the video signal via one connector (J08). The VCA generates NTSC analog video signals and consists of the following components:

- Lens Assembly with variable focus length
- Colour Video Camera including Viewfinder
- Manual Pan/Tilt Unit
- Interconnection Cable Harness

Manual and remote control from ground of the lens functions Iris, Zoom and Focus is possible. Furthermore Automatic Gain Control (AGC), Automatic Iris Control (AIC), Gamma correction, and three ”White Balance” modes for different colour temperatures are provided.

The VCA image sensor is a Charge Coupled Device (CCD) Sensor chip with 768 (horizontal) x 494 (vertical) picture elements. The VCA horizontal resolution is 470 visible lines/picture (NTSC).

VCA control is possible by SSMB/ground commands and manual.

5.7.6 PAYLOAD PHYSICAL USER INTERFACE

The user interface to the video system is located at the ISPR Utility Interface Panel (UIP) and at Standard Utility Panel (SUP) 1 and 4 for centre aisle payloads. Each interface consists of three Fibre Optic (FO) lines.

Two of the lines can be used bi–directionally for video (and high rate data) transmission to the VDPU. The third, unidirectional line serves as a video synchronization signal line.

5.7.7 SPECIFIC VIDEO INTERFACE AT ISPR LOCATION A4

In order to allow future improvements of the video processing capabilities for the APM payload complement a specific video interface is provided at ISPR location A4. The interface consists of five fibre optics lines establishing five video inputs, one video output, and one sync. line to VDPU. This lines may be used in the future to support a centralized payload video processor to be located in ISPR A4.

5.7.8 VIDEO DOWNLINK

The PFM video signal acquired from the payload is digitized by the VDPU and transmitted (MPEG 2 compressed) as a bitstream to the HRM. It is assumed that the Ground Segment will reconvert the digitized video signal to an analog NTSC signal which will be transmitted to the ground user. The HRM function is described in section 5.9.1.2.

DaimlerChrysler Aerospace, Bremen – All Rights Reserved – Copyright per DIN 34

5.7.9 PAYLOAD CAMERA COMMANDING

The video synchronization signal supplied at the user interface can be used as a signal path for the commanding of payload cameras if the provided payload cameras have implemented an appropriate command decoder. The control command is interleaved in the vertical blanking interval of the sync signal. The command source is the Sync Control Unit in the US–Lab, which is commanded and configured by US–Lab MIL– Bus commands. This will be done by the POIC cadre. ■

DaimlerChrysler Aerospace, Bremen – All Rights Reserved – Copyright per DIN 34

5.8 COMMUNICATION AND TRACKING

Communication and Tracking (C&T) is a collection of functions that provide for the exchange of audio, video and data using the SSMB, TDRSS and ARTEMIS satellite capabilities. Communications between the Space Station and the ground facilities are supported by the S–band and Ku–band links.

5.8.1 COMMUNICATION INFRASTRUCTURE

On ground the command and control loop for the APM is closed in the APM Control Centre (APM–CC) located in Europe. The APM–CC performs the following functions:

- Command and control of the APM system and coordination of ESA payloads
- monitoring of ground–ground and ground–space data link
- data processing and archiving of APM system data
- interface with other Space Station programme centres for coordination and data exchange
- management and integration of APM system and payload operations

In addition to mission control and operations support facilities, the APM ground segment for operations execution includes a communication infrastructure for communication between the US and APM ground segment. The communication between the APM and the ESA ground segment exclusively relies on the core station Communication and Tracking (C&T) system provided links. The C&T system provided links for system and payload operations are Ku–Band downlink and S–Band up– and downlink channels. Both bands are relayed to the ground via TDRSS relay satellites.
Alternatively the Ku–Band data stream can be send to ground via the JEM and the ARTEMIS satellite . The ARTEMIS will send the data with the Ka–Band link to the ground station (TBC).

The SSMB provides a Communication Outage Recorder which stores S–Band and Ku–Band data during Loss–of–Signal (LOS) periods. Stored data can be downlinked on ground requests during Acquisition–of–Signal (AOS) periods.

Communication access from the ground system to the APM is provided by means of the Interconnection Ground Subnetwork (IGS). IGS is connected to the European facilities and interfaces via trans–atlantic connection (trunk or satellite) to the NASA sites via an ESA relay, foreseen to be located at MSFC and JSC.

Figure 5.8.1–1, End–to–End Communication Infrastructure, provides a high level illustration of the ISS/APM end–to–end communication infrastructure.

DaimlerChrysler Aerospace, Bremen – All Rights Reserved – Copyright per DIN 34

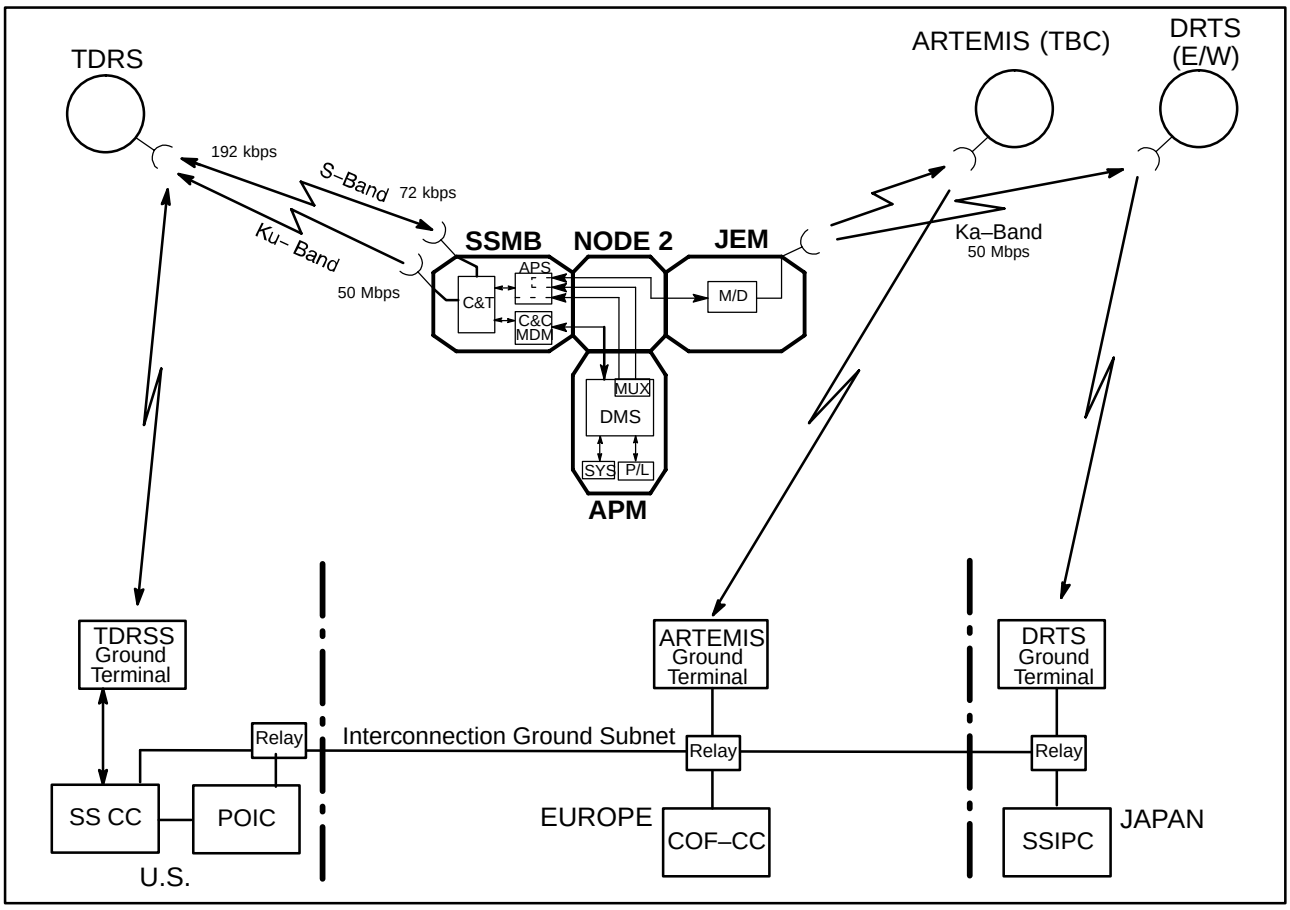

FIGURE 5.8.1–1 END–TO–END COMMUNICATION INFRASTRUCTURE

The APM DMS routes all payload MIL Bus and LAN interface telemetry to the ground via LAN to MMU and HRM. Other inputs to the HRM are compressed video data (MPEGII or Frame Grabbing) and high rate digital data from payloads. The APM downlink communication architecture is shown in figure 5.8.1–2.

DaimlerChrysler Aerospace, Bremen – All Rights Reserved – Copyright per DIN 34

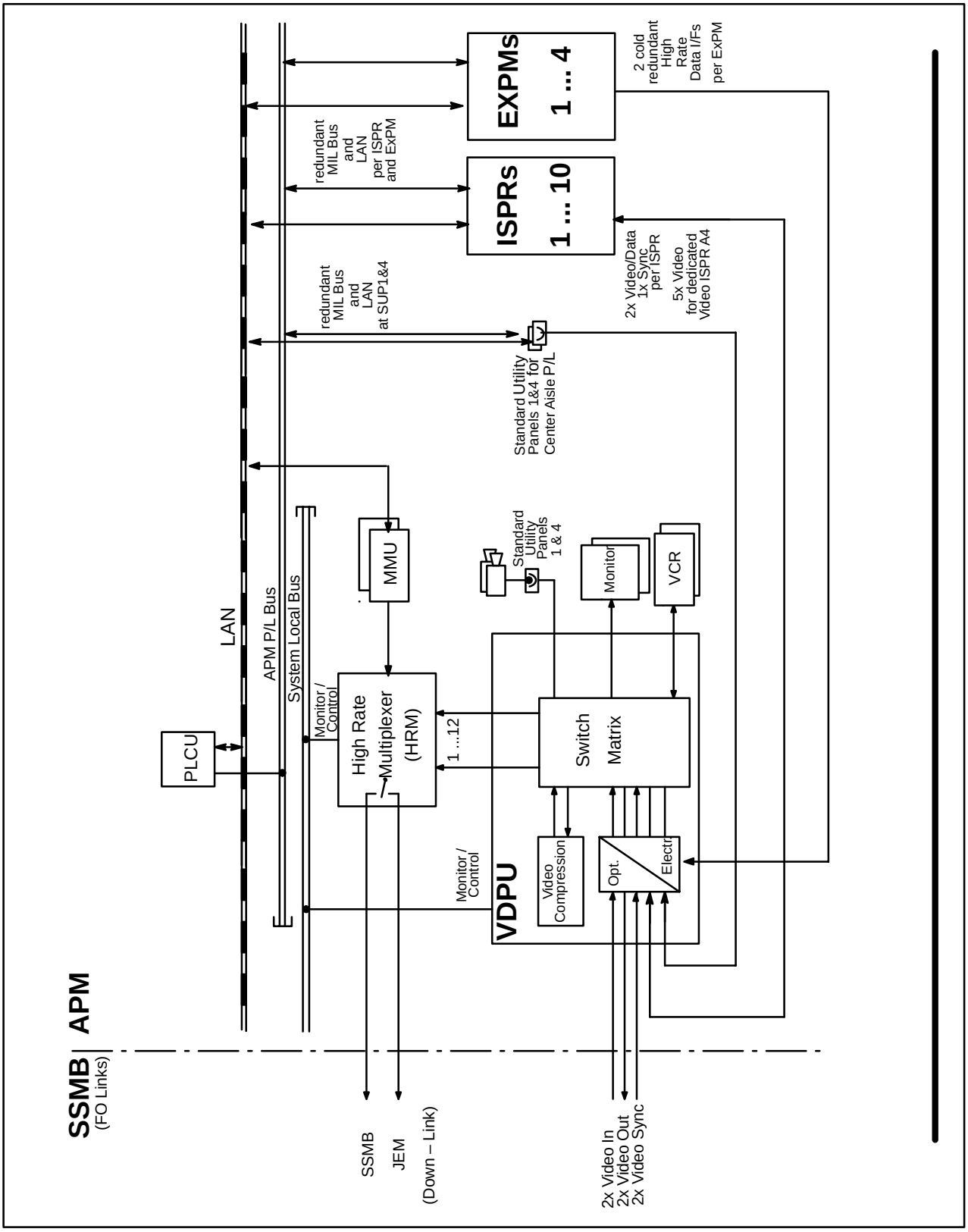

FIGURE 5.8.1–2 APM DOWNLINK COMMUNICATION ARCHITECTURE

DaimlerChrysler Aerospace, Bremen – All Rights Reserved – Copyright per DIN 34

5.8.2 S–BAND

The S–band System supports ground based tracking and provides APM system & payload data and audio communication (1 data channel and 2 audio channels). The S–band communication link is sized for 72 kbps uplink and 192 kbps downlink.

The uplink supports payload and system commands, file/ data transfer and audio data. Payload commands are routed through the SSMB C&T system to the Mission Management Computer (MMC), and from there either via the Payload Control Unit (PLCU) and the payload MIL bus to the payload (in case of RT protocol commands), or via the APM LAN to the payload LAN interface (in case of CCSDS packets).

Downlink data of the S–band includes audio, Caution and Warning messages, command responses, recorder dumps and S–band telemetry. Telemetry is defined as system and subsystem data as well as selected (critical) payload health & status data. No science data will be transmitted via the S–Band link.

The S–band coverage will range from 9 to 50 minutes per 90 minute orbit depending on the TDRSS scheduling, station attitude, zone of exclusion and interference. Therefore an average S–band coverage of 50% within one orbit can be assumed to be realistic. During periods of Loss–Of–Signal (LOS) APM S–Band telemetry data cannot be downlinked and will be recorded automatically on the US Lab MMU. The recorded data are not downlinked during following Acquisition–Of–Signal (AOS) periods. They are only downlinked on request of a member of the mission control team.

The S–Band up/–downlink has to be shared by the station users. Following data rates are allocated:

<u>Downlink:</u>

- APM telemetry containing APM system and selected payload data, e.g. Payload Health & Status data, will be transmitted with 15 Kbps.
- Normal data dump for dumping disk files, memory or diagnostic data, e.g. for playback of recorded payload telemetry, will be transmitted with 15 Kbps.
- Extended data dump, e.g. for dumping payload MMU files to the ground system, will be transmitted with 60 Kbps.

<u>Uplink:</u>

- Standard command packets with a total rate of 10 Kbps to be shared between the APM system and payloads.
- Data load packets with a total rate of 36 Kbps to be shared between the APM system and payloads.

5.8.3 KU–BAND

The Ku–band System provides high rate communication with the ground system via twelve logical channels (8 data channels and 4 video channels). The KU–band provides a downlink data rate of 43 Mbps for payload data and video on a scheduled basis.

DaimlerChrysler Aerospace, Bremen – All Rights Reserved – Copyright per DIN 34

The link supports the downlink of payload science data, video data and high rate data. The payload science data may be sourced from the payload bus, APM LAN, or the Fibre Optic (HRM/Data) interface.

The average Ku–band coverage can be assumed to be 68% within one orbit. For communication outages there is a recording capability (HCOR) at the SSMB.

The real Ku–band downlink capacity allocated to the APM users is a matter of planning and can vary between 0 Mbps and 43 Mbps (covering system and payload data) depending on the payload set and planned increment mission operations. The ESA usage of the Ku–Band will be on average 8.3 % of the total bandwidth provided by the ISS.

5.8.4 KA–BAND (TBC)

Alternatively the APM Ku–Band data can be transferred to ground via the Ka–Band. The data will be routed via the JEM/DRTS –/ARTEMIS with varying data rates shared for SSMB, JEM and APM system and payload.

DaimlerChrysler Aerospace, Bremen – All Rights Reserved – Copyright per DIN 34

5.9 UP/ DOWNLINK OF PAYLOAD DATA

5.9.1 HIGH RATE DATA DOWNLINK

5.9.1.1 HIGH RATE DATA LINK INTERFACE AND PROTOCOL

High rate data (up to 32 Mbps for the total payload complement) generated by payloads are downlinked after being multiplexed with other data in the APM High Rate Multiplexer. The data are routed via the fibre optic line at the ISPR or SUP1/4 interface and via the VDPU to the HRM. ExPMs are connected via electrical lines to the VDPU. The HRM generates a composite HRM data stream (CADUs) which is transmitted via the SSMB Automated Payload Switch (APS) and High Rate Frame Multiplexer (HRFM) to the ground infrastructure via the TDRSS Ku–Band. Figure 5.9.1.1–1 illustrates the HRM Data Downlink, where the routing of the high rate data is indicated by the thick black lines.

The protocol is in accordance to the Transparent Asynchronous Transmitter/Receiver Interface (TAXI) protocol with a transmission rate of 125 Mbps. The transmitted data generated by payloads is a bitstream which is 4B/5B encoded.

For US payloads hosted in the APM a High Rate Data Link (HRDL) is established between the ISPRs and the SSMB APS which routes the data via the High Rate Frame Multiplexer (HRFM) to ground system. The HRFM aggregate input user data rate is up to 43.195 Mbps. The allocated user data rate is determined by a weekly planning process based on payload requirements and use of the ESA allocated resources.

5.9.1.2 HRM FUNCTION

The HRM provides 12 inputs from the VDPU. The VDPU is able to switch any VDPU input from the payload to one of the 12 HRM inputs.

The HRM input user data rates are adjustable. The adjustment is mission timeline driven. Payloads are allowed to transmit bitstream data with an average rate from 32 kbps up to 32.426 Mbps in steps of 32 kbps. If a payload exceeds the adjusted and pre–coordinated data rate, the data rate will be limited to the adjusted value and all further data will be lost. The payload data transmitted to the HRM shall be a bitstream. The bitstream internal data structure is payload defined. No generation of B_PDU, VCDUs, or CADUs is required from the payload. This will all be done by the HRM and is transparent for the payloads. Each paylpoad bitstream data input (channel) will be transmitted by the APM HRM isochronously.

DaimlerChrysler Aerospace, Bremen – All Rights Reserved – Copyright per DIN 34

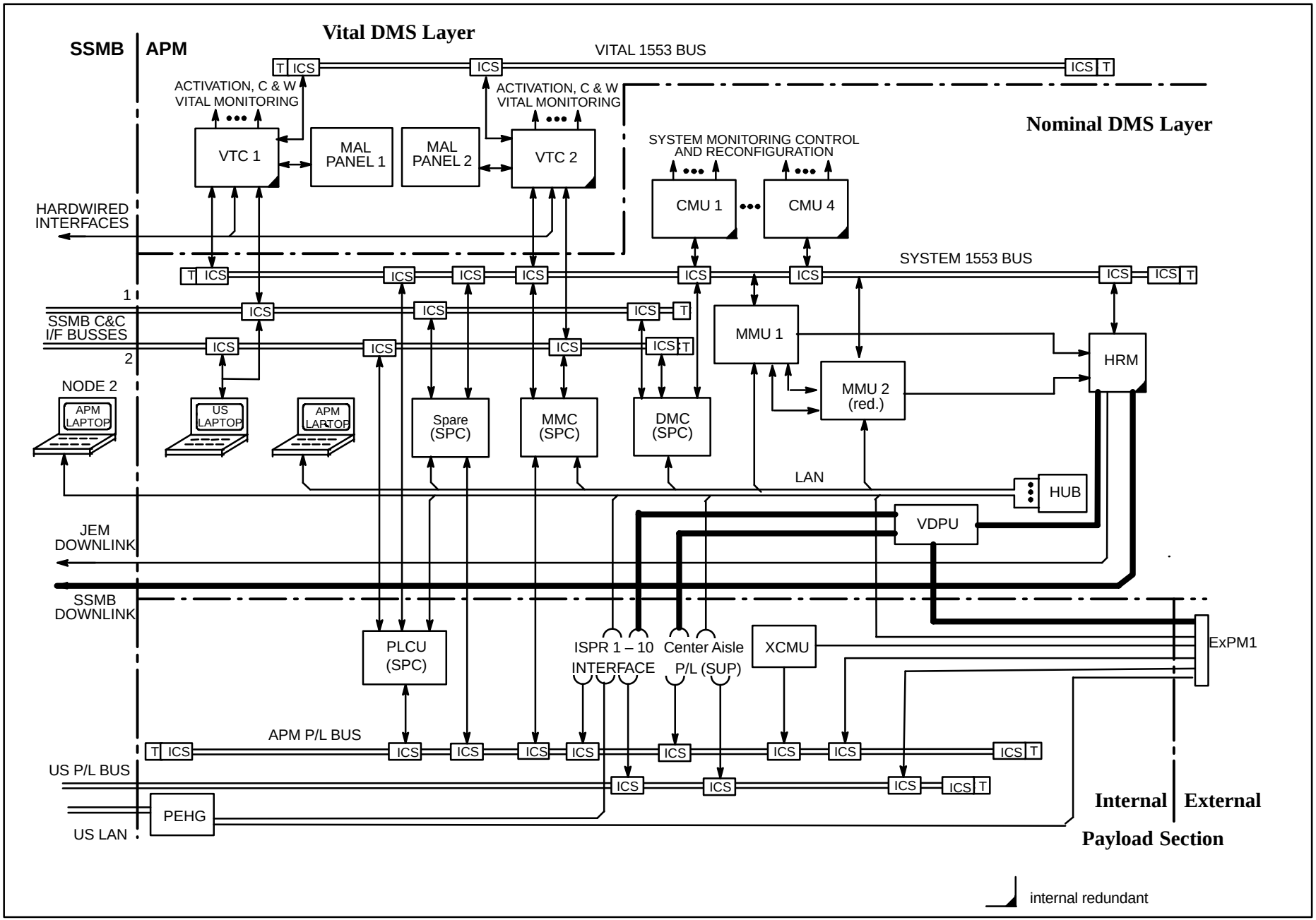

FIGURE 5.9.1.1–1 HRM DATA DOWNLINK

DaimlerChrysler Aerospace, Bremen – All Rights Reserved – Copyright per DIN 34

Each HRM asynchronous incoming data bitstream will be segmented into data blocks of a fixed length. Bitstream Protocol Data Units (B_PDUs) will be generated by adding a B_PDU header to each data segment. The header contains a bitstream data pointer. By adding a header and error control field to each B_PDU Virtual Channel Data Units (VCDU)s will be generated. Synchronization markers are added to each VCDU to delimit the boundaries of the fixed length output data units which are called Channel Access Data Units (CADUs). CADUs are delivered by the HRM to the SSMB as Grade–3 transmission service for the bitstream service.

It is assumed that the payload bitstream encapsulating by the HRM is transparent for the payload, because it is assumed that the data will be decapsulated by the Ground Segment High Rate Demultiplexer before transmission to the payload EGSE.

5.9.1.3 INVOLVED SERVICES

High rate payload science data either originating from ISPRs, SUPs or ExPMs are routed through the VDPU to the HRM and then to the ground system via the Ku–band. The services involved within the high rate data transmission are illustrated in Figure 5.9.1.3–1.

The following prerequisites are necessary to perform high rate data telemetry:

- The bitstream generation has to be part of the payload application software in the payload facility.
- The HRM configuration table needs to be configured in the APM MDB.
- Assignment of payload HRM channels to VCDUs.

DaimlerChrysler Aerospace, Bremen – All Rights Reserved – Copyright per DIN 34

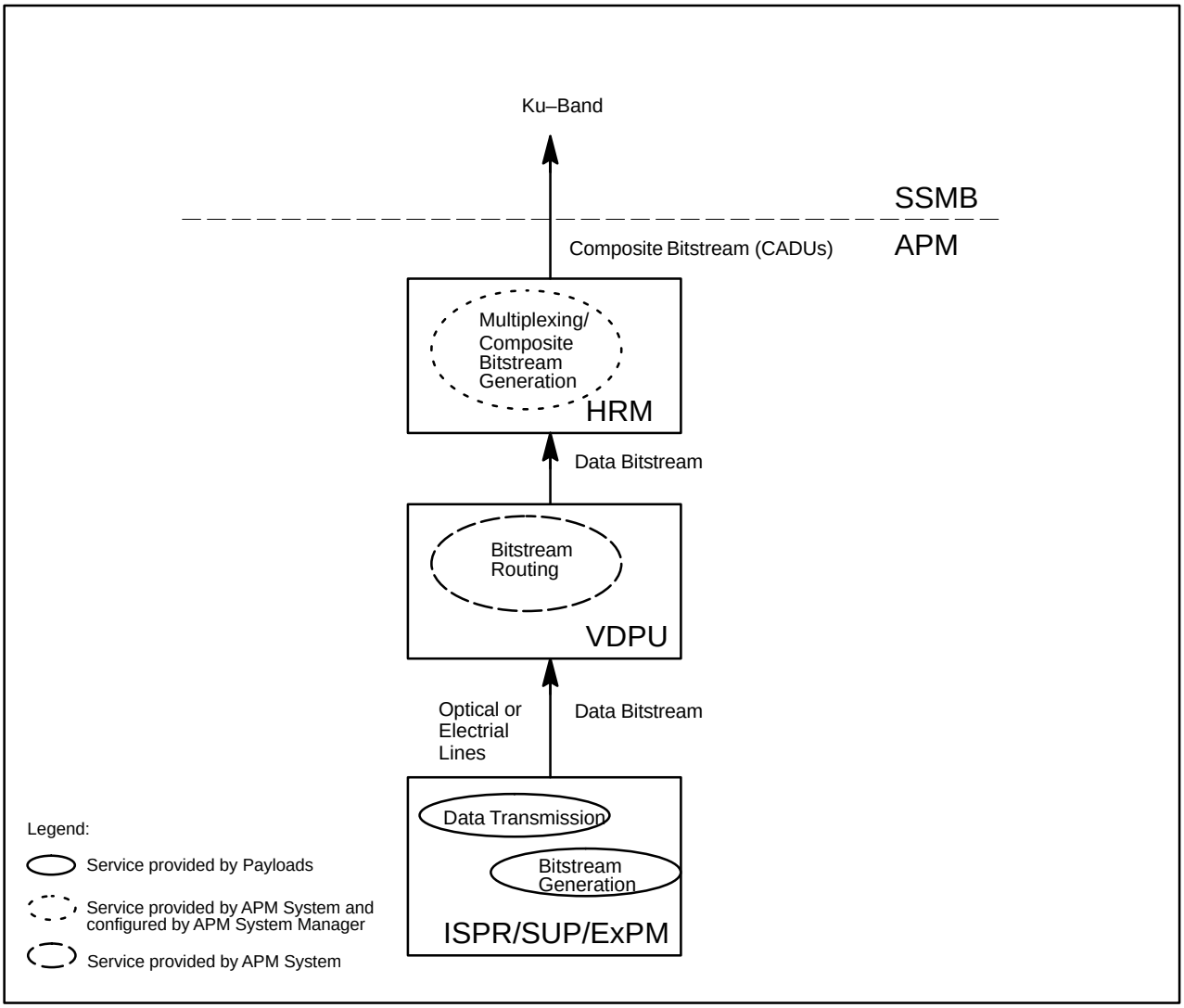

FIGURE 5.9.1.3–1 PAYLOAD HIGH RATE DATA TELEMETRY

DaimlerChrysler Aerospace, Bremen – All Rights Reserved – Copyright per DIN 34

5.9.2 MEDIUM RATE DATA LINK

Medium rate data (up to 1.55 Mbps for the payload complement) generated by payloads, can be routed as CCSDS packets via the APM LAN and the MMU to the APM HRM for downlinking via the TDRSS Ku–Band. The medium rate data link shall only be used for the downlink of telemetry.

Payloads have to assure that they do not exceed their allocated LAN data rate. Therefore a command for payloads has been established to set the LAN data rate to a dedicated limit. If anyone of the LAN users would exceed its allocated bandwidth, the LAN would be overloaded which results in a decreasing transmission of the data to be transmitted. This would affect the system and the payload functionality. The total payload LAN data rate is 1.55 Mbps.

Figure 5.9.2–1, Medium Rate Data Downlink, illustrates the routing of the medium rate data, where the routing of the medium rate data is indicated by the thick black lines.

Medium rate data of US payload racks hosted in the APM are routed via the US LAN to the APS.

5.9.2.1 INVOLVED SERVICES

The data transfer on the LAN is performed via LAN–packets with embedded CCSDS packages. The medium rate telemetry path and the services involved are displayed in figure 5.9.2.1–1.

The following prerequisites are necessary to perform medium rate data telemetry:

- The CCSDS packet generation has to be part of the payload application software in the payload facility
- The Routing Table needs to be configured in the APM MDB.
- The telemetry Internet Port (IP) port of the MMU must be known by the payload.

DaimlerChrysler Aerospace, Bremen – All Rights Reserved – Copyright per DIN 34

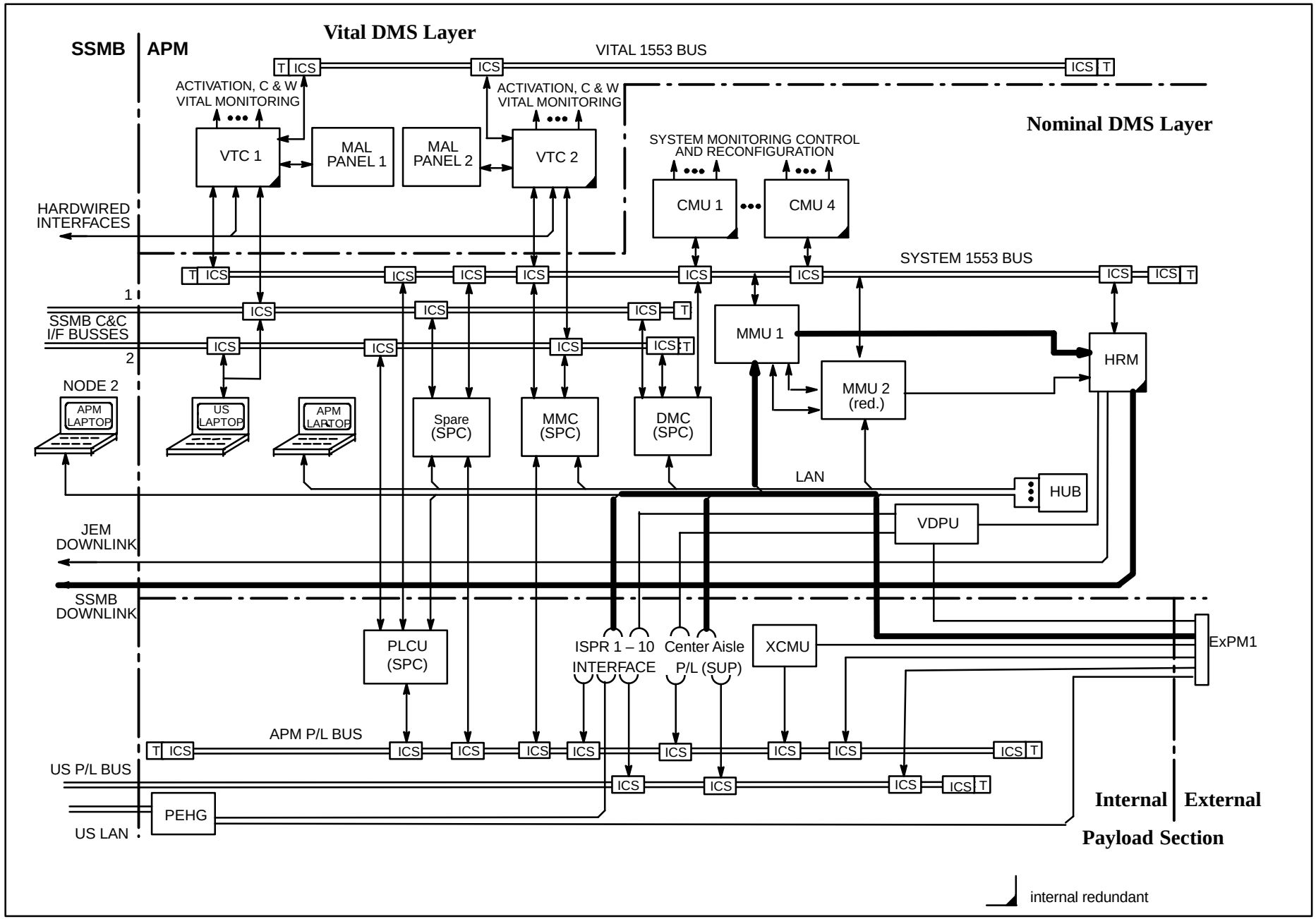

FIGURE 5.9.2–1 MEDIUM RATE DATA DOWNLINK

DaimlerChrysler Aerospace, Bremen – All Rights Reserved – Copyright per DIN 34

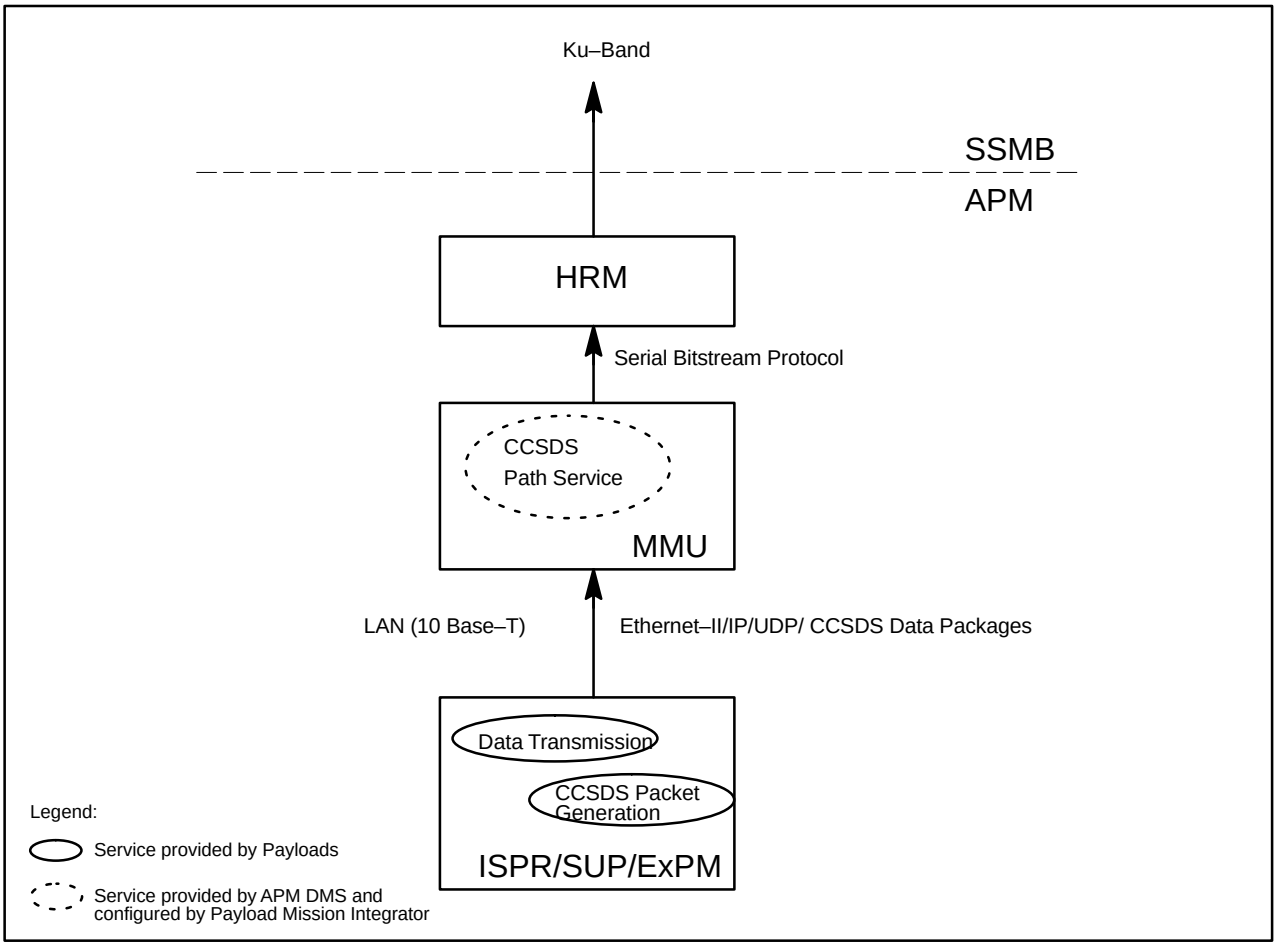

FIGURE 5.9.2.1–1 PAYLOAD MEDIUM RATE DATA TELEMETRY

DaimlerChrysler Aerospace, Bremen – All Rights Reserved – Copyright per DIN 34

5.9.3 LOW RATE DATA DOWNLINK

Low rate payload telemetry data transmitted via the payload bus consist of payload science and housekeeping data. The data rates available on the payload bus are specified in section 5.6.4.4, Payload Bus Performance and Profiling.

5.9.3.1 PAYLOAD SCIENCE AND HOUSEKEEPING DATA

Low rate science and housekeeping data generated by payloads are acquired by the PLCU via the RT protocol. The data are then available to other DMS services in the PLCU. Telemetry packets may be generated by a DMS service within the PLCU from the acquired payload data. They are routed to the APM–CC via the APM LAN to the MMU, and from there via the HRM to the APM–SSMB interface for downlink via TDRSS Ku–Band. It is assumed that the ground segment will be able to route payload low rate telemetry to the payload user. Figure 5.9.3.1–2, Payload Low Rate Science Data Downlink, displays the routing of the low rate data indicated by the thick black lines. Figure 5.9.3.1–1 illustrates the system provided services and the services to be provided by the payloads necessary when transmitting low rate telemetry with the RT protocol.

The following prerequisites are necessary to perform low rate data telemetry:

- The Payload bus Input/Output configuration needs to be defined in the data base. The MDB has to contain the packet definition and the packet descriptor.
- The Routing Table needs to be configured in the APM MDB.
- Analog, discrete and serial data to be acquired from the payload need to be defined in the APM MDB to allow access to these data via their SID in the PLCU.
- To start the data acquisition on the payload bus and the CCSDS packet generation, an application in the PLCU, an automated procedure in the PLCU, or a ground command needs to be available.

The payload bus I/O profile, which is the configuration of the payload bus including the bandwidth allocation to each payload, will be fixed for one mission increment. The payload bus will be reconfigured from mission increment to increment.

Low rate data of US ISPRs hosted in the APM are routed via the US Lab Payload bus to the SSMB P/L MDM, and from there via the APS and Ku–Band to ground.

5.9.3.2 PAYLOAD HEALTH & STATUS DATA

Payloads shall provide Health & Status (H&S) data to the APM system to assure that the payload is operating within the safety guidelines as defined by the Safety Review Panel. The H&S data shall provide information about the payload operation state, resource consumption, etc. The H&S data will be transferred to the PLCU also via the RT protocol into the common data pool. The payload H&S data within the data pool may be used for payload FDIR, exception monitoring, APM laptop displays, and a subset for the S–Band telemetry.

DaimlerChrysler Aerospace, Bremen – All Rights Reserved – Copyright per DIN 34

Housekeeping data of US payloads located in the APM are transferred via the US–Lab payload bus extension in the APM to the US–Lab P/L MDM. The MMC will receive from the P/L MDM ancillary data packets containing payload data from US payloads hosted in the APM. The data are transferred by using the lateral transfer capability. The received data are available in the PLCU and can be used by the APM system or can be distributed to APM payloads on request.
The contents of the data packet will be defined pre–increment and will include those parameters necessary to determine the status of a payload support function in the APM for the manifested US payload racks in the APM.

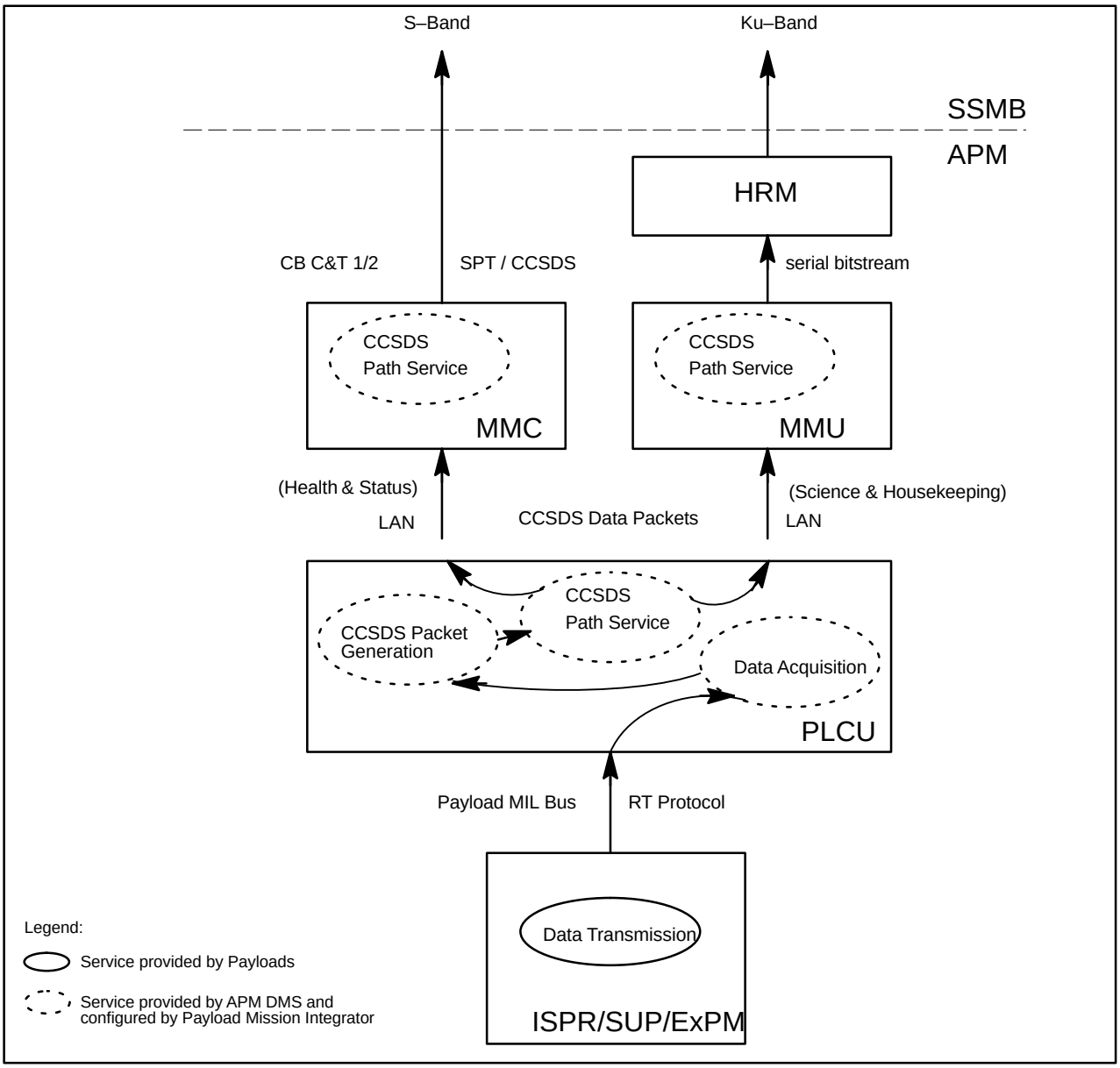

FIGURE 5.9.3.1–1 PAYLOAD LOW RATE DATA TELEMETRY AND INVOLVED SERVICES USING RT PROTOCOL

DaimlerChrysler Aerospace, Bremen – All Rights Reserved – Copyright per DIN 34

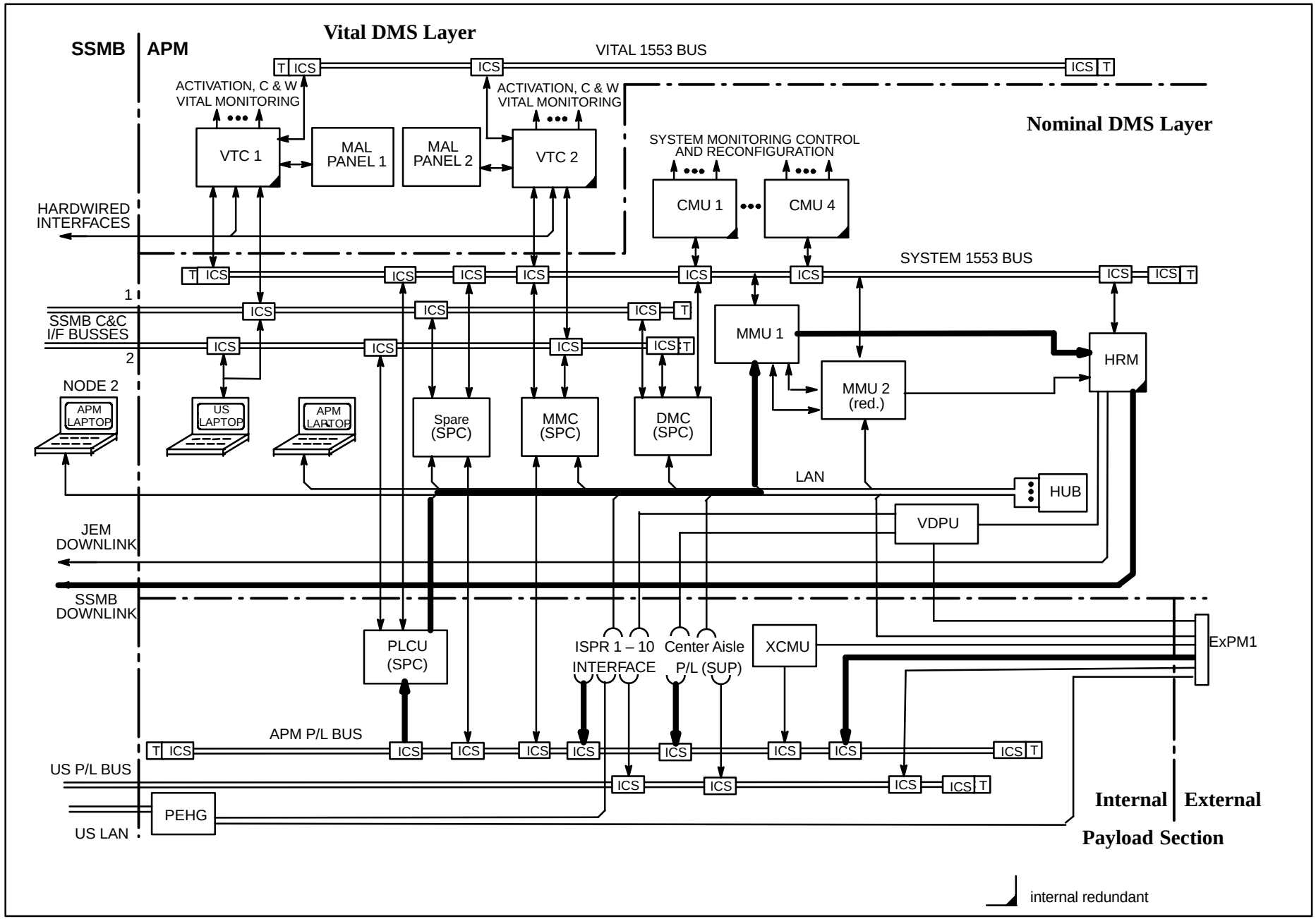

FIGURE 5.9.3.1–2 PAYLOAD LOW RATE SCIENCE AND HOUSEKEEPING DATA DOWNLINK

DaimlerChrysler Aerospace, Bremen – All Rights Reserved – Copyright per DIN 34

5.9.4 COMMANDING

Commands to payloads may be initiated on ground and onboard to the following destinations:

- ISPR 1..10
- SUP 1 & SUP 4
- ExPM 1..4
- Payload ADA Applications (SWOP) in the PLCU

The checksum of commands carried within CCSDS packets is checked by the final command destination by applying the checksum algorithm if the checksum bit is set. The checksum bit must be set for all ground commands, otherwise the commands will be rejected by the SSMB onboard system.

5.9.4.1 GROUND COMMANDS

Commands initiated by the ground system are uplinked to the APM for both system and payload operation through the S–band of the SSMB C&T system. Payload commands, either initiated at a APM–CC or USOC, are routed from the ground to the MMC. The MMC routes the packet either to the PLCU, or to the payload LAN interface depending on the APID.
In case of a payload MIL Bus command, the APM–CC generates the CCSDS command packet which will be removed automatically by a PLCU service which afterwards initiates the RT protocol command on the payload bus.
In case of CCSDS command packets the MMC routes the packets directly to the payload LAN interface.
The command routing from ground to the onboard payload, indicated by the thick black lines, is illustrated in Figure 5.9.4–1, Payload Command Uplink.

Telecommands are routed by the CCSDS path service. Payload application commands are carried within CCSDS packets. The maximum command size of ground commands is 62 words including CCSDS header and checksum. This restriction must be considered for sending commands from ground to onboard.

The normal uplink capability is 8 command CCSDS packets per second for the whole Station (system **and** payload). This rate has to be shared by all ground control centres, i.e. MCC, POIC, APM–CC, etc. The uplink capability for payloads will be between 0 and 8 commands per second depending on the system requirements for uplink capability.

The uplink capability may be extended to 16 command packets per second if the slot for the data load packets will be used also for commands, but this is mission timeline dependant.

The command routing is performed according to the defined packet identifier (APID) and packet type bit in the CCSDS primary header. Packets with APIDs not predefined will be discarded and an exception to ground and crew will be generated.

DaimlerChrysler Aerospace, Bremen – All Rights Reserved – Copyright per DIN 34

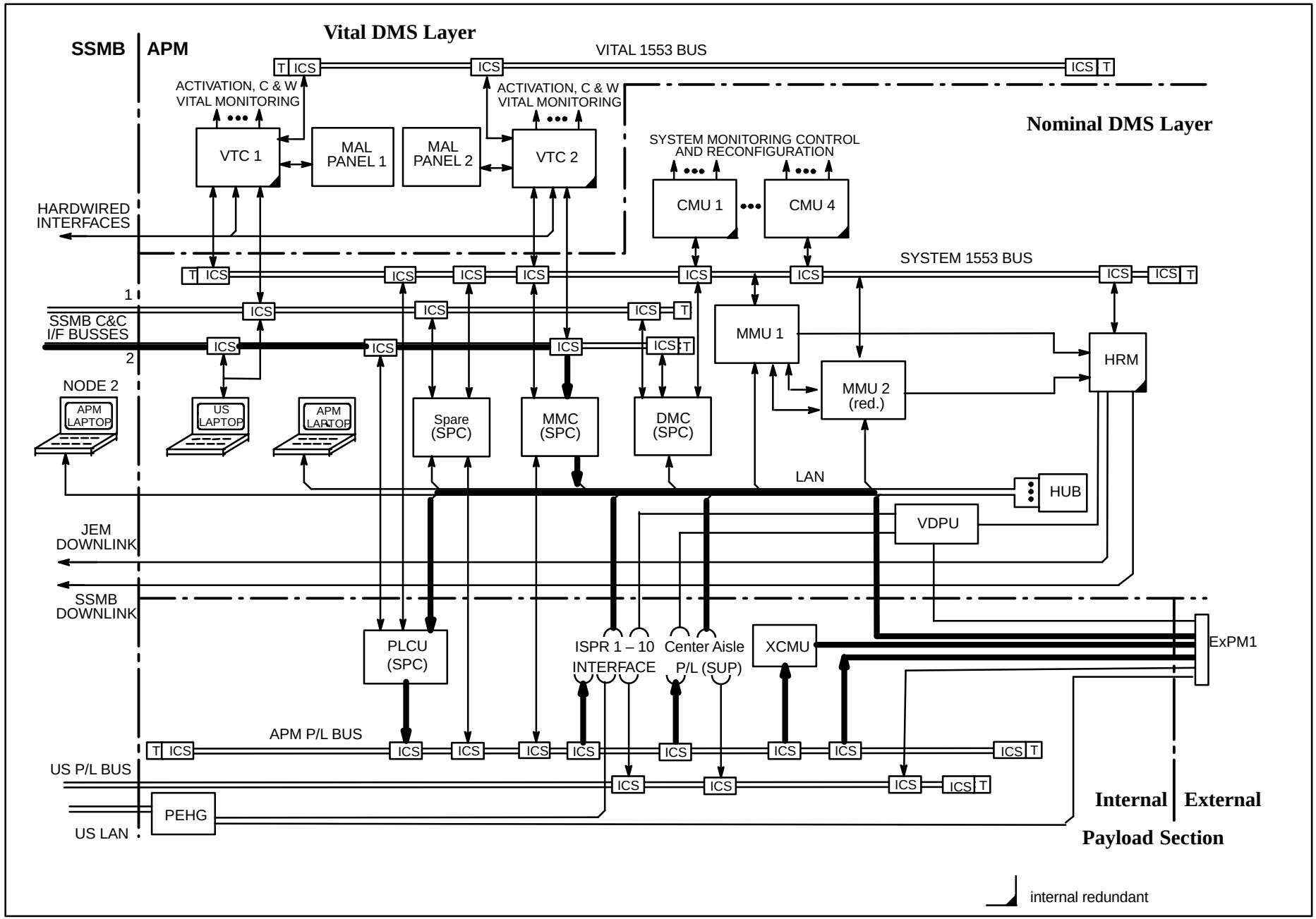

FIGURE 5.9.4–1 PAYLOAD COMMAND UPLINK

DaimlerChrysler Aerospace, Bremen – All Rights Reserved – Copyright per DIN 34

Payload commanding is performed end–to–end, once the user is enabled for commanding according to the Short Term Plan (STP) or in real–time by the APM–CC. Any hazardous commands identified will be issued from the APM–CC.

5.9.4.1.1 INVOLVED SERVICES

Figure 5.9.4.1.1–1 illustrates the involved services when commanding an onboard payload from the ground system. The following prerequisites are necessary to perform telecommanding:

- The Routing Table needs to be configured in the MDB so that each routing node identified in the system is able to route each received packet.
- When a command shall be routed straight forward to a payload LAN interface, a unique APID is required for the path from the source to the payload.

In case of payloads using the CCSDS protocol (LAN interface), the CCSDS packet containing the embedded payload internal command will be routed to the payload and has to be depacketized by the software in the payload facility.
Otherwise, when the payload uses the RT protocol, the primary and secondary header of the CCSDS command will be automatically removed by the DMS. The depacketized SW command is then transmitted with the RT protocol on the payload bus to the payload by the DMS command executor. Command functions to the payload RT could be write single word, write analog output, level command, etc.

All command packets from ground contain a checksum which has to be checked by the final onboard destination.

DaimlerChrysler Aerospace, Bremen – All Rights Reserved – Copyright per DIN 34

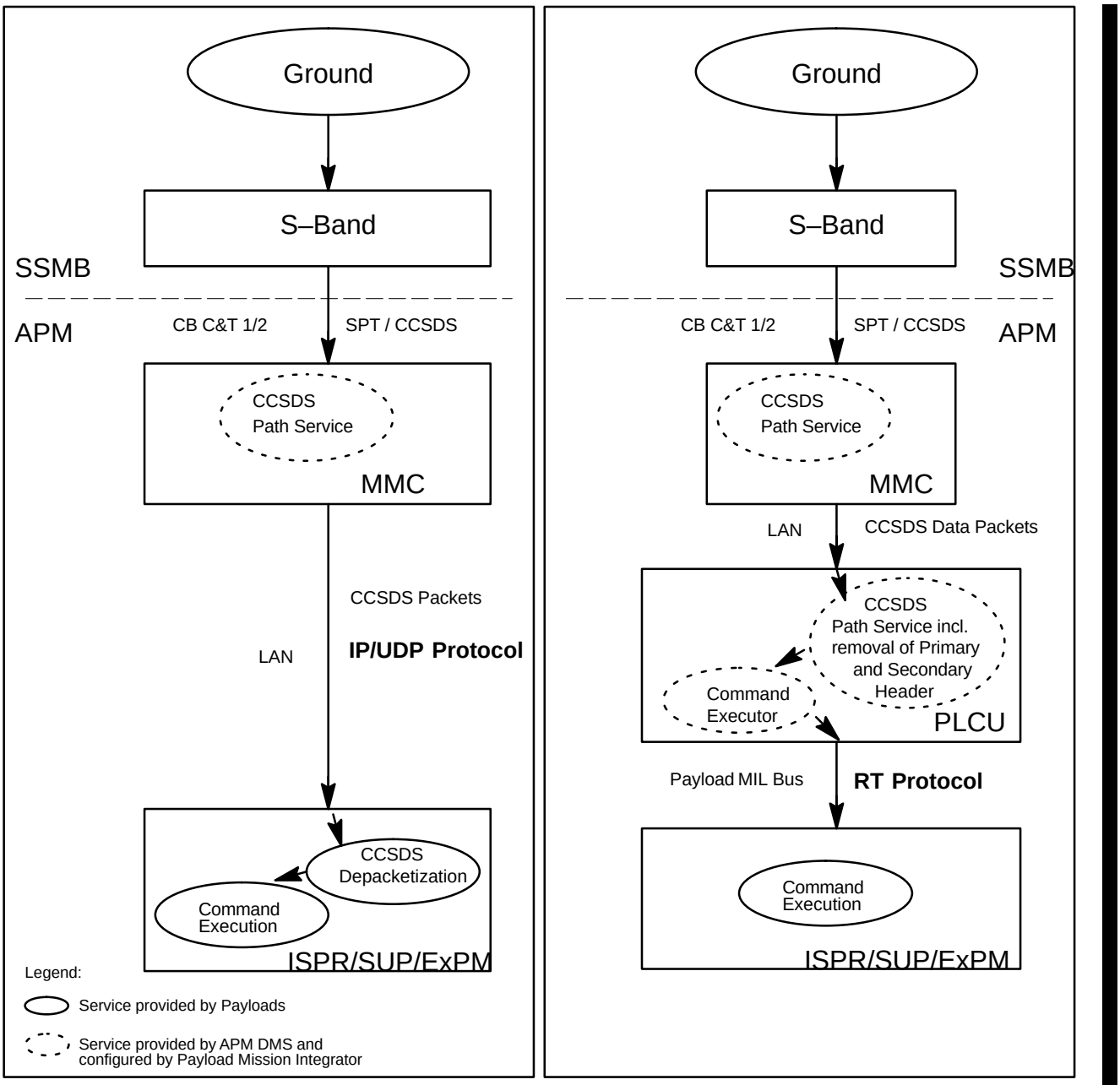

FIGURE 5.9.4.1.1–1: COMMAND PATH FROM GROUND TO PAYLOADS USING RT PROTOCOL OR IP/UDP PROTOCOL

DaimlerChrysler Aerospace, Bremen – All Rights Reserved – Copyright per DIN 34

5.9.4.2 ONBOARD COMMANDS

The on–board components can initiate End–Item commands (RT protocol commands), SW commands and/ or CCSDS commands to APM payloads depending on the kind of source.

- Payload ADA application running in the PLCU:
  - CCSDS packets with embedded PL internal commands to Payload LAN interface
  - End–Item commands to Payloads via MIL Bus using RT protocol
- Payload Flight Automated Procedures (FLAPs) running in the PLCU:
  - End–Item commands to Payload via MIL Bus using RT protocol
  - CCSDS packets with embedded PL internal commands to Payload LAN interface (no command response function supported by FLAP)
- Master Timeline (MTL):
  - CCSDS packets with embedded PL internal commands to Payload LAN interface
  - Trigger PLCU FLAP which initiates MIL Bus RT commands
- CPL scripts:
  - SW commands to Payload SWOP running in the PLCU
  - SW commands to PLCU DMS executor for End–Item commands (RT protocol commands) to Payload
- Payload commands:
  - CCSDS packets with embedded internal commands to a dedicated payload PLCU SWOP

Software commands are interfaces to Software Onboard Programs (SWOPs), and need to be configured with the related parameters in the MDB. If applicable, SW commands are translated into End–Item commands (RT protocol commands) by the DMS command executor.

Software commands initiated by laptop synoptic displays may start payload applications in the PLCU (Payload SWOPs). Payload SWOPs may generate and transmit CCSDS packet to a payload via the APM LAN (e.g. for ancillary data requests and ancillary data transfer), or they initiate End–Item commands transmitted with the RT protocol via the payload MIL Bus.

DaimlerChrysler Aerospace, Bremen – All Rights Reserved – Copyright per DIN 34

5.9.4.2.1 INVOLVED SERVICES

5.9.4.2.1.1 COMMANDS FROM CREW PROCEDURES

Figure 5.9.4.2.1.1–1 illustrates the involved services when commanding an onboard payload by a CPL script on the onboard Laptop. The following payload related prerequisites are necessary to perform commanding from crew procedures:

- Software command specification in the MDB.
- CPL script generation (edition & compilation) and storage in the MDB.
- Payload PLCU application that generates CCSDS packets and performs the transmission to the payload in case of CCSDS protocol usage.
- Configuration of DMS command executor in the PLCU via MDB.

The payload shall send a CCSDS command response to the PLCU application.

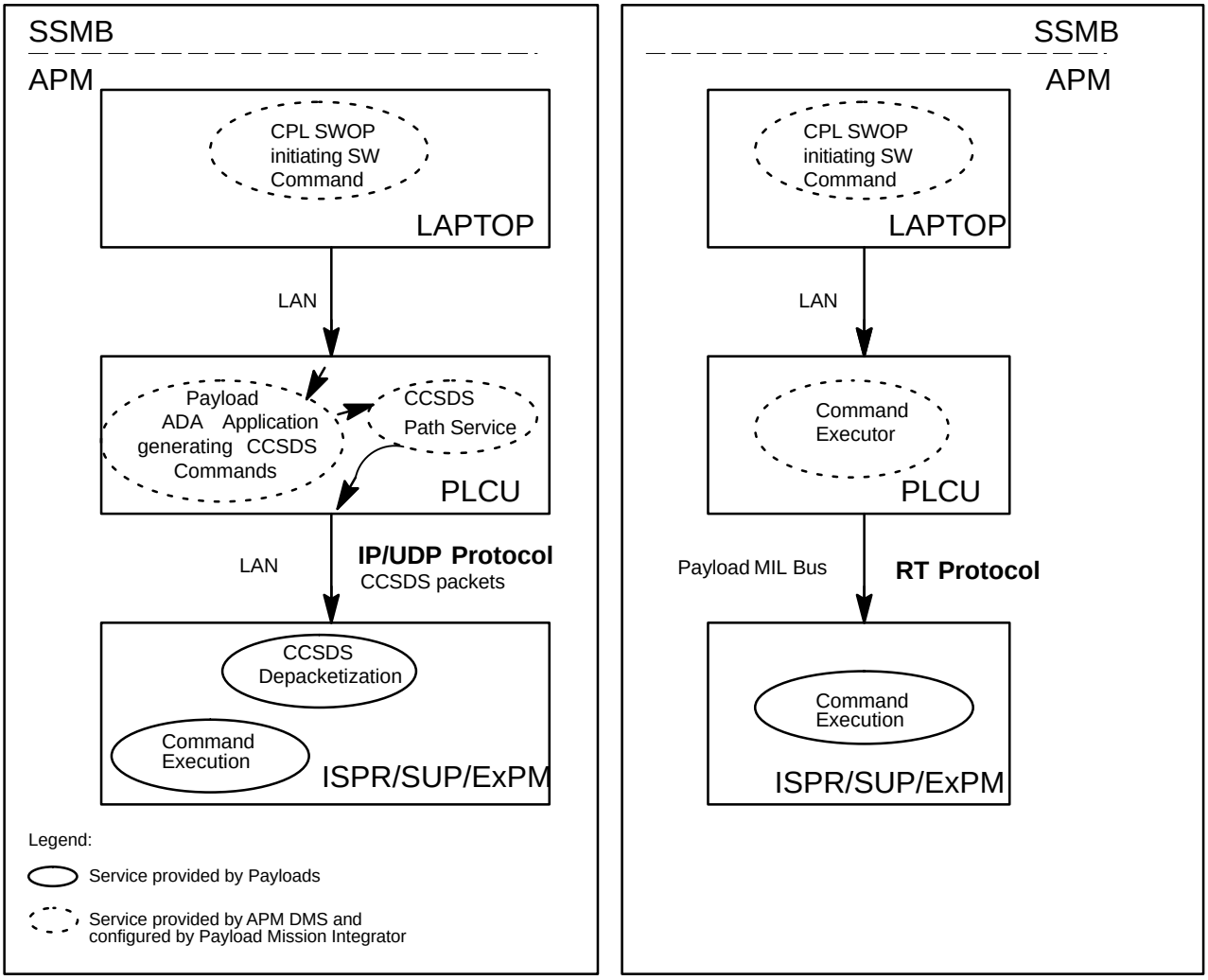

FIGURE 5.9.4.2.1–1 COMMAND PATH FROM CREW PROCEDURE TO PAYLOADS USING RT PROTOCOL OR IP/UDP PROTOCOL

DaimlerChrysler Aerospace, Bremen – All Rights Reserved – Copyright per DIN 34

5.9.4.2.1.2 COMMANDS FROM PAYLOAD ADA APPLICATION

Figure 5.9.4.2.1.2–1 illustrates the involved services when commanding an onboard payload by a Payload ADA Application running in the PLCU. The following payload related prerequisites are necessary to perform commanding from Payload Software On–board Programs (SWOPs):

- Payload ADA Application that generates CCSDS command packets and performs the transmission to the payload in case of LAN interface usage.
- The Routing Table needs to be configured in case of LAN interface usage.
- Payload ADA Application that generates End–Item commands to the payload in case of RT protocol usage.

The payload shall send a CCSDS command response to the PLCU application.

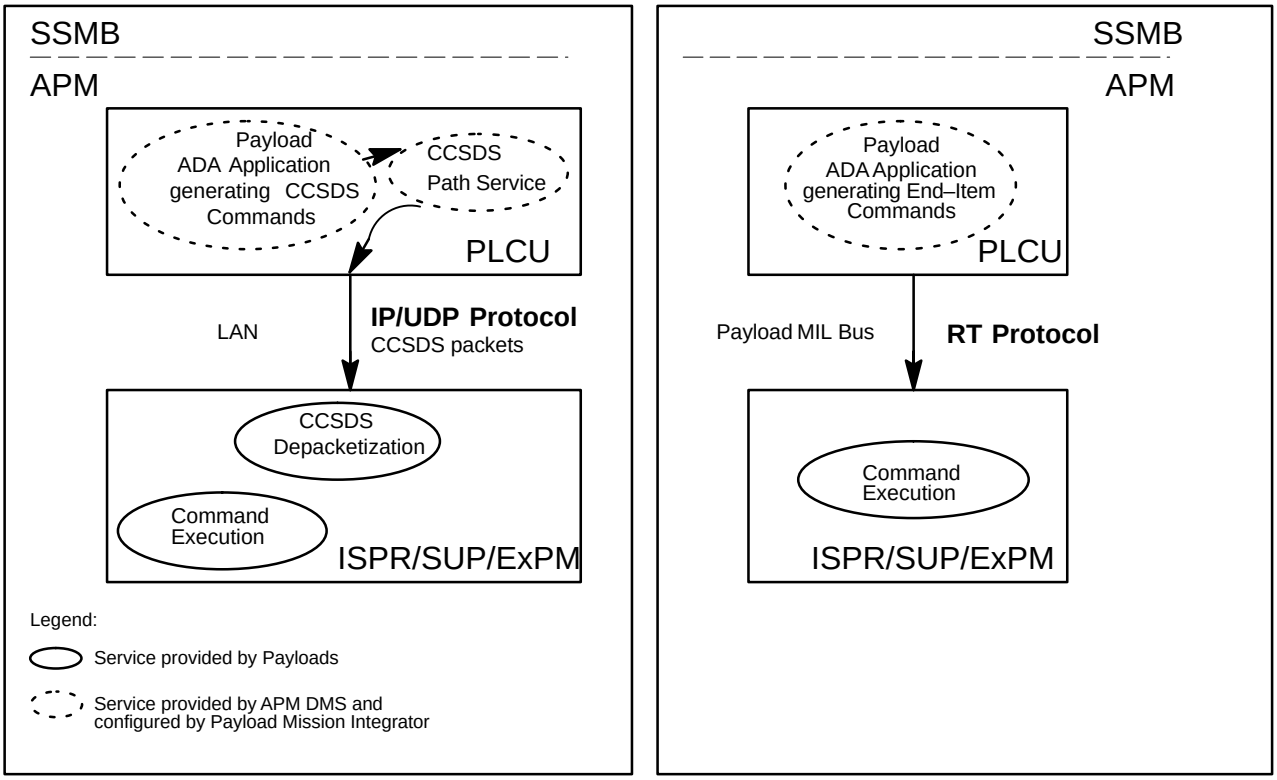

FIGURE 5.9.4.2.1.2–1 COMMAND PATH FROM PAYLOAD SWOPS TO PAYLOADS USING RT PROTOCOL OR IP/UDP/CCDSDS PROTOCOL

DaimlerChrysler Aerospace, Bremen – All Rights Reserved – Copyright per DIN 34

5.9.4.2.1.3 COMMANDS FROM PAYLOAD AUTOMATED PROCEDURE

Figure 5.9.4.2.1.3–1 illustrates the involved services when commanding an onboard payload by a Payload Automated Procedure (AP) running in the PLCU. The following payload related prerequisites are necessary to perform commanding from Payload APs:

- Payload FLAP that generates CCSDS command packets and performs the transmission to the payload in case of LAN interface usage.
- The Routing Table needs to be configured in case of LAN interface usage.
- Generation of the Payload AP including End–Item commanding in case of RT protocol usage.

Payload AP execution may be triggered from ground or the APM Laptop. FLAPs don't support the function to receive CCSDS packets.

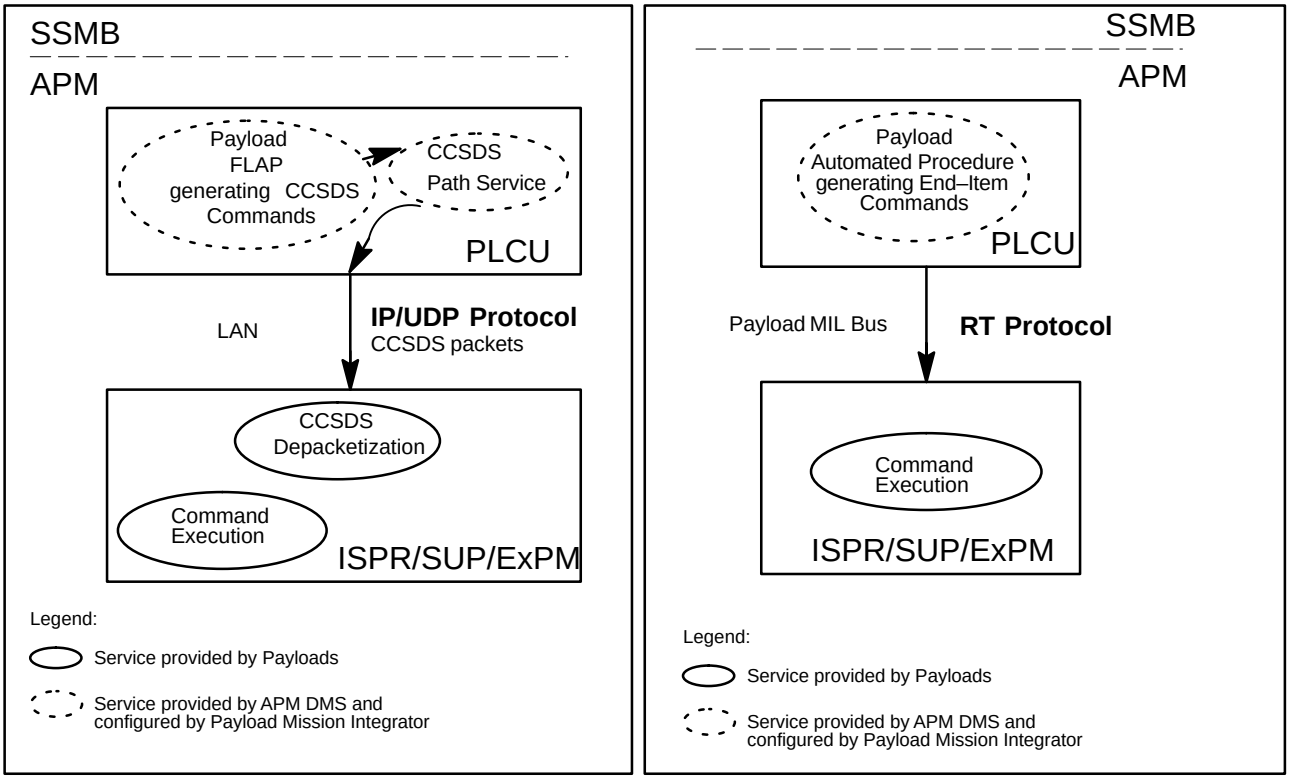

FIGURE 5.9.4.2.1.3–1 COMMAND PATH FROM PAYLOAD AUTOMATED PROCEDURE USING RT PROTOCOL OR IP/UDP/CCSDS PROTOCOL

DaimlerChrysler Aerospace, Bremen – All Rights Reserved – Copyright per DIN 34

5.9.4.2.1.4 COMMANDS FROM MASTER TIMELINE

Figure 5.9.4.2.1.4–1 illustrates the involved services when commanding an onboard payload by the Master Timeline. The following payload related prerequisites are necessary to perform commanding from the MTL:

- The Routing Table needs to be configured in the MDB (in case of CCSDS commands).
- Generation of the Payload AP including End–Item commanding in case of RT protocol usage.

The payload shall send a CCSDS report packet to the MTL when the activity started by MTL command has been finished. If required, the MTL may be configured in a way that no report will be expected.

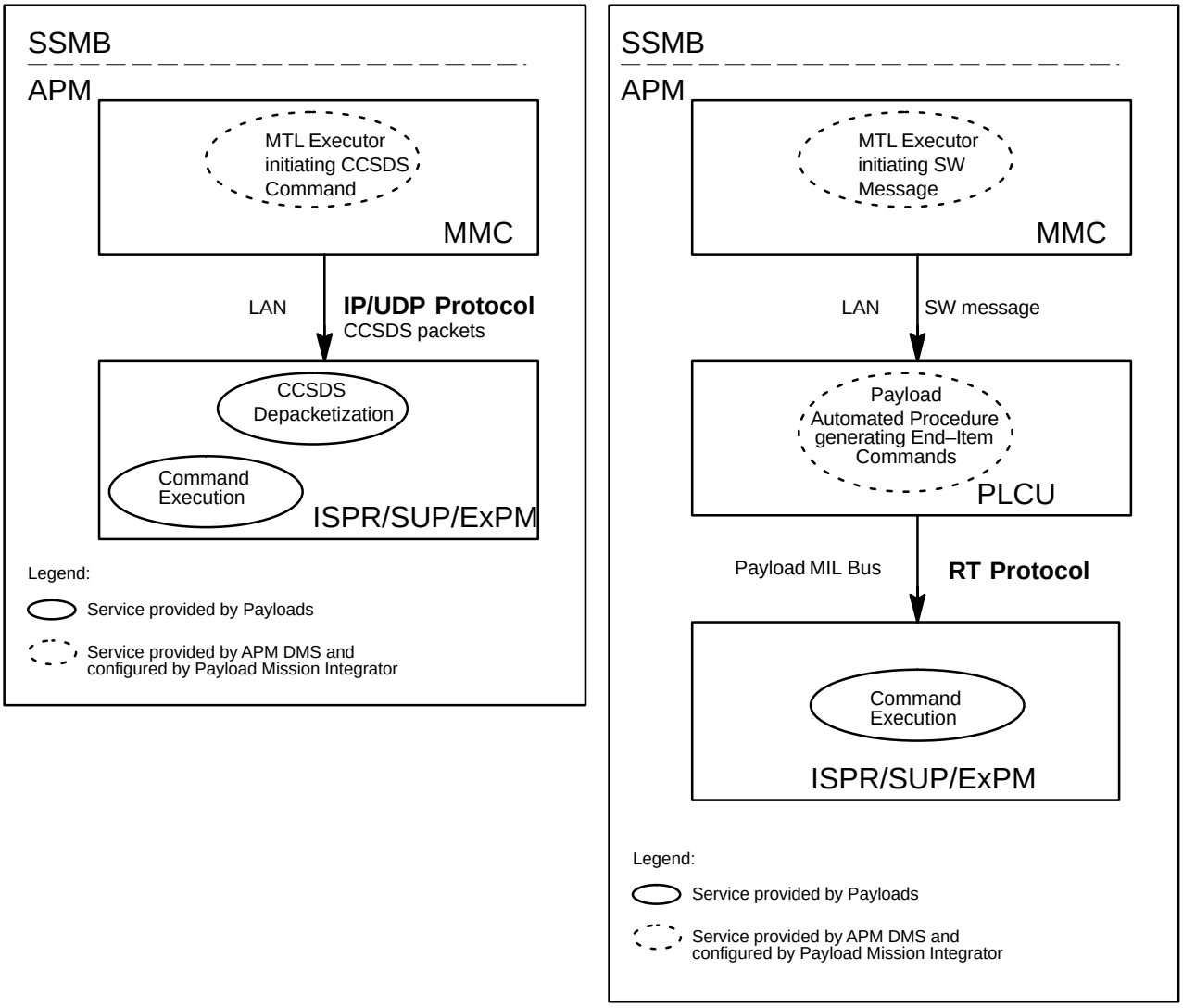

FIGURE 5.9.4.2.1–1 COMMAND PATH FROM MASTER TIMELINE TO PAYLOAD LAN INTERFACE

DaimlerChrysler Aerospace, Bremen – All Rights Reserved – Copyright per DIN 34

5.9.4.2.1.5 COMMANDS FROM PAYLOAD

Figure 5.9.4.2.1.5–1 illustrates the involved services when commanding a Payload ADA Application (SWOP) running in the PLCU by a payload. The following payload related prerequisites are necessary to perform commanding from Payload Software On–board Programs (SWOPs):

- Payload ADA Application that receives CCSDS command packets via the LAN interface.
- The Routing Table needs to be configured.

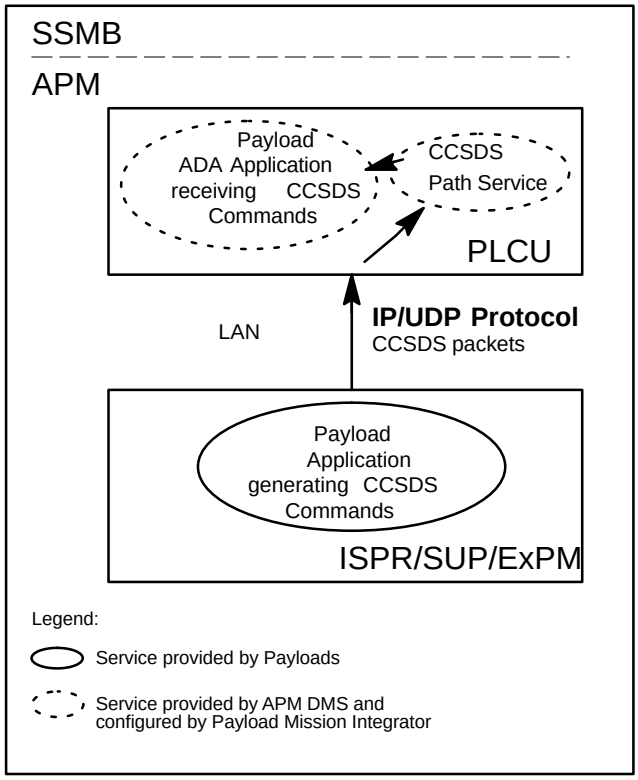

FIGURE 5.9.4.2.1.5–1 COMMAND PATH FROM PAYLOAD TO PLCU SWOP

DaimlerChrysler Aerospace, Bremen – All Rights Reserved – Copyright per DIN 34

5.9.5 FILE UPLOAD

In addition to the command capability the APM system provides the possibility to transfer complete payload parameter sets, command sequences and procedure files from the ground to the on–board system with the file upload service.

The execution of a file upload has to be precoordinated with SSCC because the data load service is shared amongst all on–board users. Due to the relative high bandwidth to this service the data can be transferred with 36 kbps. The maximum data load packet length is 288 words of 16 bit (i.e. packet length is 576 bytes) including header and checksum.

Payload ground users have to provide the upload files (e.g. parameter sets, command sequences, procedure files, processing software) to the APM–CC, e.g. via the Integrated Ground Subnetwork (IGS). The file upload itself is then executed by the APM–CC with the Operational File Transfer (OFT) protocol to the APM MMU.

Payloads can retrieve the payload files from the MMU after file upload via the NFS protocol. The payload file transfer will be controlled by the APM–CC.

5.9.6 FILE/ DATA DUMP

The dump function is used for dumping disk files, memory or diagnostic data from the on–board system to the ground system. The dump CCSDS packets will be routed via the APID contained in the CCSDS header from the source to the ground system via the S–band. Normal and extended data dumps are possible. The maximum normal data dump packet length is 96 words including header and checksum, and the maximum extended data dump packet length is 384 words including header and checksum. The file/data dump itself is then executed with the APM defined operational file transfer protocol on top of the dump service.

Payloads can store parameter files via the NFS protocol on the MMU. The payload file transfer will be controlled by the APM–CC. MMU files are transferred to the ground by the APM–CC using the OFT protocol. The payload files will then be provided to the payload ground users, e.g. via the Integrated Ground Subnetwork (IGS).

In contrast to the telemetry service the file/data dump service between ground and on–board can only be supported for <u>one</u> on–board source at a time for the whole station. This is because to initiate a data dump from a target processor to the ground, logical connections must be preset by ground command from the target processor through all the routing nodes to the S–band, followed by a command to the target processor to initiate the dump process.

DaimlerChrysler Aerospace, Bremen – All Rights Reserved – Copyright per DIN 34

5.9.7 TELEMETRY/ TELECOMMAND SYSTEM FUNCTIONS OVERVIEW

The APM DMS provides services to payloads. Payload ADA Applications and Payload Automated Procedures (APs), both executed within the PLCU of the onboard system, may use these services to control their payloads. The objective of APs and Payload Applications is the execution of payload related functions by a computer program performing a sequence of functions.

Payload Automated Procedures (APs) are software programs written with the User Control Language (UCL) editor and compiler. The UCL editor and compiler is a tool of the Software Design and Development Facility (SDDF). APs will be edited off–line, compiled on ground, and stored in the MDB for the flight image generation.

The APM DMS service interfaces are accessible via the UCL system library which provides the basic set of functions and procedures for the payload AP development. The payload APs have to call the system library procedures with payload provided parameters.
In the on–board system the compiled payload APs will be executed within the PLCU by the DMS interpreter.

Payload ADA Applications in the PLCU have to be developed on ground with the APM Software Design and Development Facility (SDDF). The SDDF contains an integrated pre–compiler with the capability to access the MDB for End Item references. The End Item references will be translated to the Short Identifiers (SIDs) of the End Items. After source code edition, pre–compilation and compilation, the ADA application will be linked by the SDDF. The result of the linker is an executable image, the Software Onboard Program (SWOP) which has to be loaded into the MDB for the payload flight image generation which will be uploaded.

The APM DMS provides libraries with interface procedures in ADA for Payload ADA Applications, and UCL for Payload Automated Procedures. The engineering support team with support of the payload integration team will be responsible for the development of payload APs and payload ADA applications.

DaimlerChrysler Aerospace, Bremen – All Rights Reserved – Copyright per DIN 34

Table 5.9.7–1 displays the telemetry/ telecommand system functions which may be used by payloads. It is identified what a payload developer has to provide when using the system functions which are required for his payload equipment. The table lists the required configurations, applications and services to support these functions.

- Payload Facility Applications are applications within the ISPR/ Centre Aisle payload equipment and will be developed under payload developer, or rack integrator responsibility.
- Configurations of APM Services are the prerequisites for the services usage. It is the configuration of the mission data base and is the payload mission integrator responsibility.
- Involved APM services are the services which need to be involved when using a dedicated payload function. The services are provided by the APM system and have to be configured before usage.
- PLCU applications are either Payload Automated Procedures (APs), or Payload ADA Applications (SWOPs) executed onboard in the PLCU. The payload mission integrator, supported by the payload developer, is responsible for PLCU application development.

DaimlerChrysler Aerospace, Bremen – All Rights Reserved – Copyright per DIN 34

TABLE 5.9.7–1 TELEMETRY/ TELECOMMAND SYSTEM FUNCTIONS OVERVIEW

System Function	Payload Facility Applications	Configuration of APM Services	Involved APM Services	PLCU Applications
Low Rate Telemetry via RT Protocol	- Application to transmit telemetry via the RT protocol	- Data Acquisition - CCSDS Packet Descriptor Definition - APID Assignment	- Data Acquisition - CCSDS Packet Generation - CCSDS Routing Service	- PLCU AP or Payload Application in the PLCU to start Packet Generation - Ground Command (not a PLCU application)
Medium Rate Telemetry via LAN interface	- Application to transmit telemetry via the IEEE 802.3 LAN interface - CCSDS Packet Generation	- APID Assignment - Telemetry IP Port related to MMU	- CCSDS Routing Service	
High Rate Telemetry via fibre optic	- Application to transmit telemetry via the High Rate interface - Bitstream Generation	- High Rate Multiplexer Configuration	- Multiplexing (Composite Bitstream Generation)	
Payload Commands via RT Protocol from: - Ground to Payload via DMS TC executor (End–Item Commands)	- Application to receive commands via the RT protocol, command interpretation, and command execution	- Depacketize CCSDS Command Packet - Command Execution - APID Assignment	- CCSDS Routing Service performing depacketization - Command Execution	
- CPL SWOP to Payload via PLCU FLAP (End–Item Commands)	- Application to receive commands via the RT protocol, command interpretation, and command execution	- Command Execution	- Command Execution	
- Payload ADA Applications (End–Item Commands)	- Application to receive commands via the RT protocol, command interpretation, and command execution			- Payload ADA Application in the PLCU generating End–Item Commands
- Payload Automated Procedure (End–Item Commands)	- Application to receive commands via the RT protocol, command interpretation, and command execution			- Payload Automated Procedure generating End–Item Commands

DaimlerChrysler Aerospace, Bremen – All Rights Reserved – Copyright per DIN 34

TABLE 5.9.7–1 TELEMETRY/ TELECOMMAND SYSTEM FUNCTIONS OVERVIEW

System Function	Payload Facility Applications	Configuration of APM Services	Involved APM Services	PLCU Applications
Payload Commands via IP/ UDP Protocol from: - Ground (CCSDS Command) – – – – – – – – – – – – – – - Payload ADA Application (CCSDS Commands) - MTL (CCSDS Commands)	- Application to receive commands via the IP/UDP protocol, command interpretation (CCSDS depacketization), command execution, and transmit command response	- APID Assignment	- CCSDS Routing Service	
	- Application to receive commands via the IP/UDP protocol, command interpretation (CCSDS depacketization), command execution, and transmit command response	- APID Assignment	- Send CCSDS Packet - Receive CCSDS Packet - CCSDS Routing Service	- Payload ADA Application generating CCSDS command packets and receiving command responses
	- Application to receive commands via the IP/UDP protocol, command interpretation (CCSDS depacketization), command execution, and transmit report	- APID Assignment - MTL setup	- CCSDS Routing Service	
File retrieval from MMU to Payload Facility	- NFS client which retrieves file from MMU via NFS protocol	- UDP/IP configuration - File attributes configuration	- Network File System (NFS)	
File transmittal from Payload to MMU	- NFS client which sends file from MMU via NFS protocol	- UDP/IP configuration - File attributes configuration	- Network File System (NFS)	

DaimlerChrysler Aerospace, Bremen – All Rights Reserved – Copyright per DIN 34

5.10 EMERGENCY, WARNING, CAUTION AND SAFING SYSTEM (EWACS)

5.10.1 APM VITAL DMS EWACS DESCRIPTION

The APM EWACS system has the responsibility to alert the crew and ground control of hazardous conditions concerning crew safety and space station integrity which need crew actions/ intervention. It also provides the capability for subsequently initiating safing commands to control or to support control of the hazardous conditions.

Except in the unberthed survival mode, all APM system and payload EWACS parameter and safing commands are processed through the vital data management. Some of the EWACS functions/ parameters are also needed during unmanned operation of the station. These functions may then be handled as a FDIR process with automatic recovery functions.

Fire Detection and Suppression (FDS) both on the system side and Payload fire detection within ISPRs is an important part of the EWACS functionality of the APM.

DaimlerChrysler Aerospace, Bremen – All Rights Reserved – Copyright per DIN 34

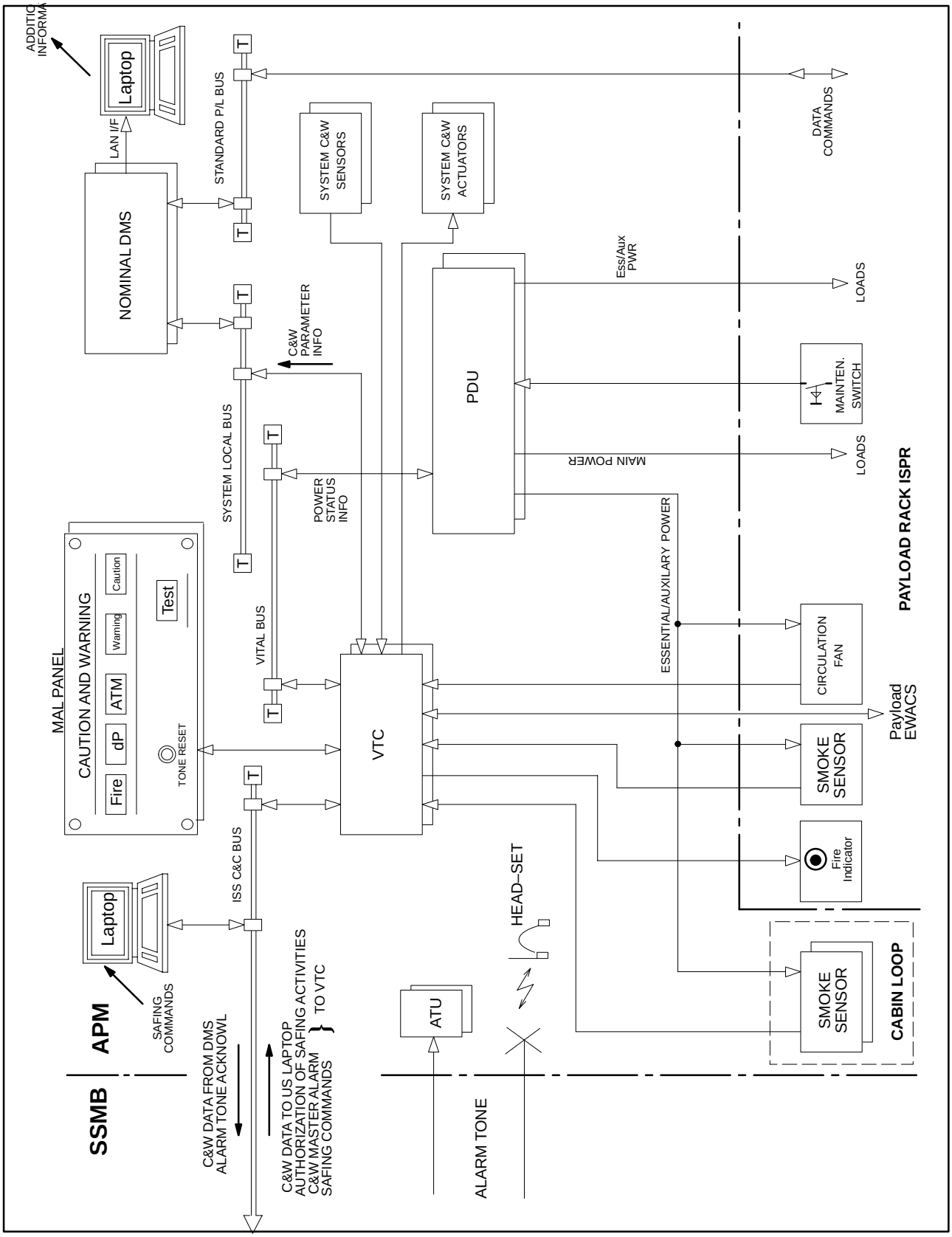

FIGURE 5.10.1–1 FUNCTIONAL BLOCK DIAGRAM OF APM EWACS SYSTEM

DaimlerChrysler Aerospace, Bremen – All Rights Reserved – Copyright per DIN 34

5.10.2 APM VITAL DMS EWACS IMPLEMENTATION FOR PAYLOADS

The vital data management supports the processing of sensor data supporting the annunciation and safing of hazardous conditions within ISPR payload facilities. For each ISPR one configurable Emergency signal and one configurable Warning signal are cyclically acquired by the vital DMS. Upon reception of an out–of–limit condition the vital DMS will issue one of the two safing commands associated with the two E&W signals. Furthermore the vital data management system will report the harzardous condition to the US– Lab C&C–MDM as the stationwide supervising instance. The C&C– MDM will initiate a stationwide alarm tone. The Master Alarm & Light Panel (MAL) and the Audio Terminal Unit (ATU) are part of the crew alert interface. Furthermore the out–of–limit condition processed in the vital DMS will drive a display on the US–Laptop with further details of the alarm condition.

The implementation of sensors to detect payload EWACS conditions in the payload racks is the responsibility of the payload rack integrator.
Furthermore it is the responsibility of a safety review panel to decide if it is required to implement safing commands for a dedicated payload or not.

5.10.3 PAYLOAD CAUTION AND WARNING DATA (C&W DATA)

The APM provides also the capability to acquire and route payload caution and warning data as part of the payload health & status data sets. The data will be acquired by the PLCU on the MIL– STD 1553B APM payload bus. Determination of Caution and Warning (C&W) parameters which cause C&W events is the resonsibility of the payload developer. The selection and classification of the events associated with the caution and warning will be approved by the Payload Review Safety Panel (PSRP) during the payload safety review.

Note:
The APM PLCU will construct from all individual payload C&W data a dedicated C&W status packet to be transmitted either to the US–Lab P/L MDM or C&C MDM (TBC). The C&C MDM will initate a station wide alarm via the MAL panels in all modules. This implementation is under discussion with NASA and not baseline yet.

DaimlerChrysler Aerospace, Bremen – All Rights Reserved – Copyright per DIN 34

5.11 PAYLOAD FIRE DETECTION AND SUPPRESSION (FDS)

5.11.1 IMPLEMENTATION

ISPRs and centre aisle payloads shall not constitute an uncontrolled fire hazard to the APM and other payloads. The payload developers shall analyze all aspects of the payload hardware, interfaces, and operations to determine the level of fire risk of their payloads. Payloads containing a credible fire risk, as identified by the payload and confirmed by the safety review process, shall interface the APM Fire Detection System (FDS).

In order to support the implementation of the APM Fire Detection and Suppression (FDS) system, the payload rack integrator has to provide a smoke sensor with a rack internal air circulation fan. Furthermore a smoke indicator LED and a maintenance power switch shall be implemented on the ISPR front panel (see figure 5.11.1–1, Functional Block Diagram of APM ISPR FDS System). The smoke sensor is a NASA Standard Payload Outfitting Equipment (SPOE).

The smoke sensor provides obscuration and scatter output voltages which are cyclically acquired and monitored by the APM Vital Telemetry and Command Controller (VTC). A Built–In–Test (BIT) function allows verification of the smoke senor nominal performance or potential performance degradations due to lens contamination / detector malfunctions. The BIT function is enabled / disabled by the VTC signal to the smoke detector.
A verified ISPR fire condition is reported to the SSMB as part of the APM EWACS data set. The SSMB will then issue a stationwide fire alarm. In addition the VTC will initiate an electrical power shut down of the ISPR with a verified fire condition.

Since each payload rack also has an interface for a portable fire extinguisher, the following sequence of activities for suppression shall be used:

- depowering of the zone remotely, or manually via rack maintenance power kill switch, and interruption of air flow in the affected zone
- local fire fighting by injection of CO_2 with the portable fire extinguisher

The above order of sequence is compliant with the principal fire fighting scenario. Between the different steps, additional activities such as module isolation (deactivation of intermodule ventilation, hatch closure) may be required.

DaimlerChrysler Aerospace, Bremen – All Rights Reserved – Copyright per DIN 34

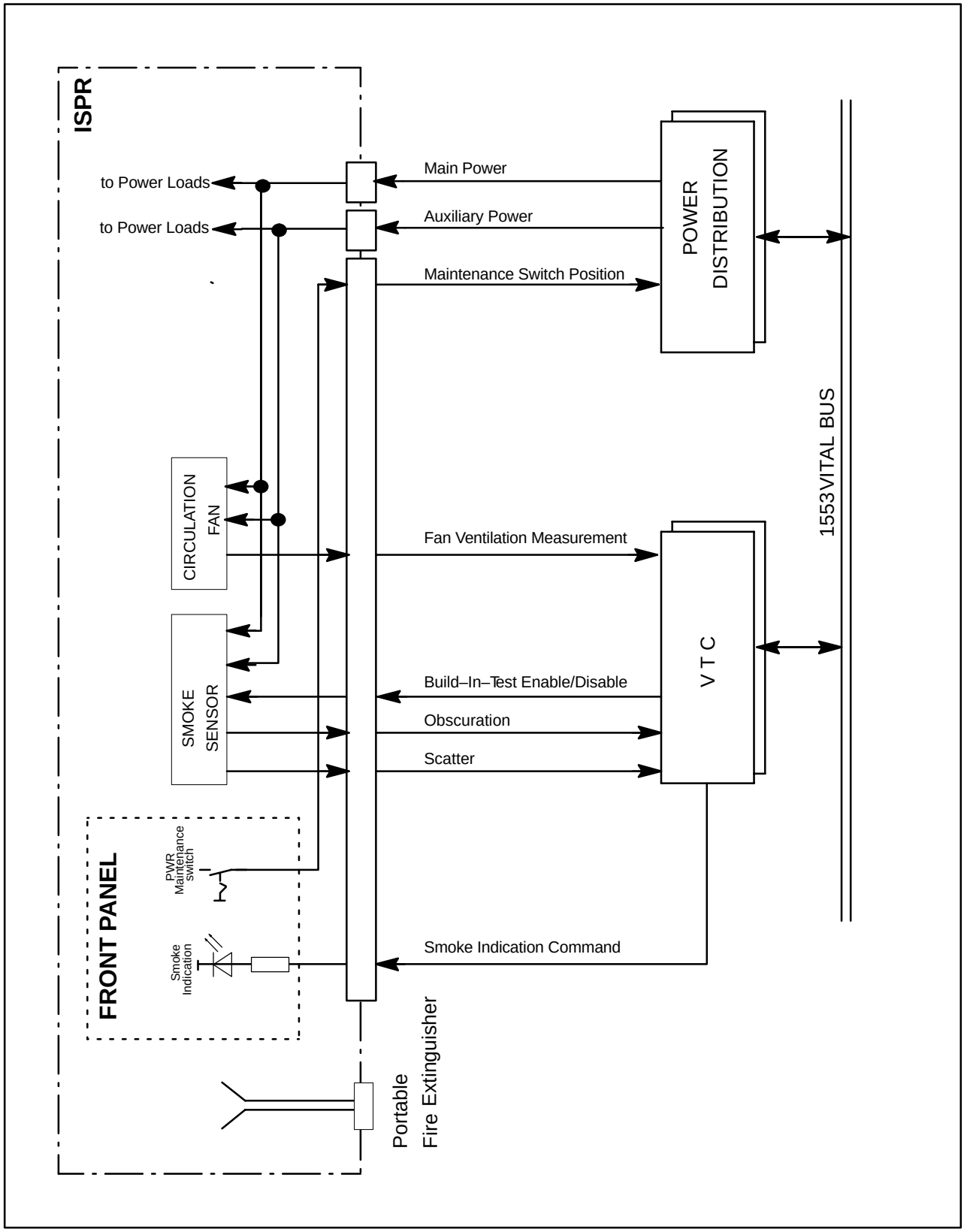

FIGURE 5.11.1–1 FUNCTIONAL BLOCK DIAGRAM OF APM ISPR FDS SYSTEM FOR AN ISPR USING MAIN & AUXILIARY POWER

DaimlerChrysler Aerospace, Bremen – All Rights Reserved – Copyright per DIN 34

5.11.2 PAYLOAD PROVISIONS AND INTERFACES

The APM system provides at the ISPR interface the following data input and command interfaces:

- smoke sensor data to vital DMS
- circulation fan housekeeping data to vital DMS
- smoke indication LED commanded via vital DMS
- rack maintenance power switch command receiver at PDU

Centre aisle payloads requiring the APM fire suppression capabilities, i.e. containing a credible fire risk, will have a dedicated interface to the portable fire extinguisher.

The auxiliary power supply is independent from the main power supply because each supply originates from different PDUs, but auxiliary power will also be deactivated by pushing the local rack power maintenance switch.

5.11.3 MANUAL FIRE SUPPRESSION

The APM FDS zoning concept requires manual fire suppression for ISPRs and centre aisle payloads. Each ISPR and centre aisle payload has to provide an interface to allow insertion of the APM Portable Fire Extinguisher (PFE) nozzle.

The fire suppressant characteristics are as follow:

- employed agent – CO_2
- MOP inside PFEX – 7240 kPa @ 42.8 °C (1050 psia @ 109 °F)
- CO_2 flow rate (see Figure 4.5.2–1)
  CO_2 temperature range: –45 °C ÷ 49 °C
  CO_2 pressure range: 4.5 to 72.4 kPa

DaimlerChrysler Aerospace, Bremen – All Rights Reserved – Copyright per DIN 34

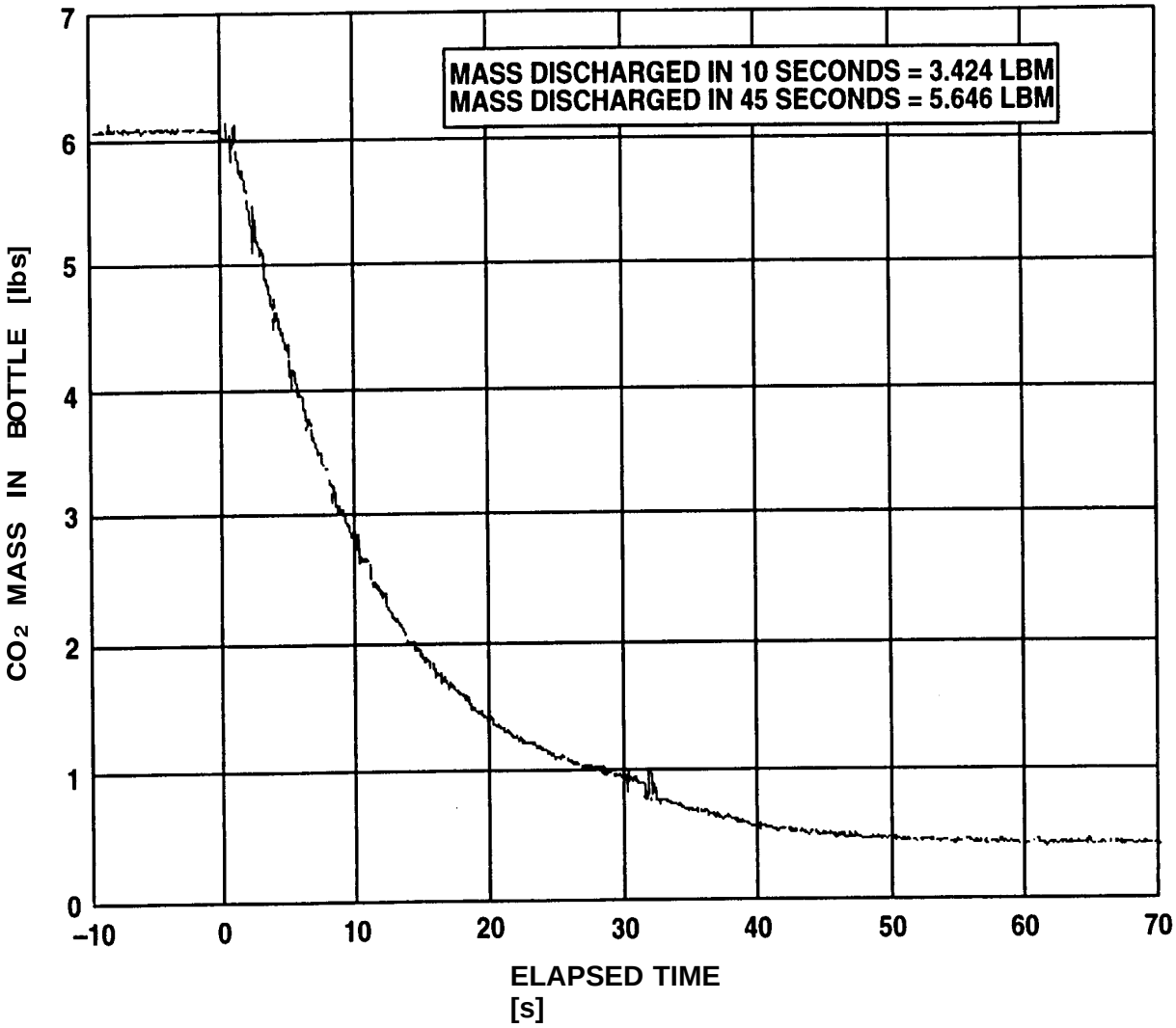

FIGURE 5.11.3–1 PFEX CO2 DISCHARGED FLOW RATE VS. TIME

5.11.4 PAYLOAD PARAMETER MONITORING FOR FIRE PREVENTION

The installation of an ISPR smoke sensor is not a mandatory requirement for ISPR rack integrators; indeed the need for a smoke sensor for fire detection is the result of a payload fire credibility analysis on rack level. Payload developers may decide to perform critical parameter monitoring with data acquired and exception monitored by the payload in order to prevent occurrence of a fire and thus the need for fire detection by smoke sensors. Critical parameter data shall be provided as C& W data to the APM as described under para 5.10.3.

DaimlerChrysler Aerospace, Bremen – All Rights Reserved – Copyright per DIN 34

5.12 CONTAMINATION CONTROL

The APM overall contamination control approach, for the aspects of interest to the payload developer and integrator, is based on the following main elements:

- Assurance of required cleanliness levels during manufacturing, assembly, integration, test, transportation and launch phases;
- Minimization of contamination production, by design and operational procedures;
- Assessment of primary contamination effects and coordination of corrective actions;
- Limited provision of decontamination equipment and services (e.g. cabin air filtration);
- Support for definition of design and maintenance / repair measures to restore cleanliness after possible contamination events;
- Support for planning and scheduling of service tasks associated with contamination control.

These various elements of contamination control are complementary and multi–disciplinary, implying the involvement of engineering, operations and product assurance.

Analysis must be conducted at all levels, including the payload level, leading to concepts for design, maintenance and operations meeting the contamination control requirements.

Requirements concerning contamination are defined in the Columbus Pressurized Payload Interface Requirements Document (R.D. 2.2.18)

5.12.1 INTERNAL CONTAMINATION CONTROL

The APM internal contamination is determined by several factors relevant to the presence in the APM internal environment of crew, payloads and APM flight configuration equipment and materials. In this respect, payload specific tasks shall include the following:

- cleanliness assurance;
- material selection;
- offgassing contamination control;
- leakage contamination control;
- particulate contamination control;
- microbial contamination control;
- toxicity hazard evaluation and control;
- maintenance / repair.

By the defined activities, the payload must limit and control contamination releases to the APM internal environment, in order to minimize impacts on crew, module and other payloads.

DaimlerChrysler Aerospace, Bremen – All Rights Reserved – Copyright per DIN 34

5.12.1.1 TRACE GAS CONTAMINATION

Airborne trace gas contamination in the habitable environment is controlled at ISS level via a centralized removal system and with the support of adequate air exchange between the different modules (Inter Module Ventilation). Analysis is performed both at APM and ISS levels to predict airborne concentrations of trace contaminants with the aim of keeping the atmospheric conditions under control with respect to toxicity. Spacecraft Maximum Allowable Concentration (SMAC) values are specified. For the purpose of the integrated trace gas contamination mission analyses, trace gas emissions and material offgassing information is requested from all levels, including payloads, as derived from relevant testing or analysis and budgeting of offgassing tests data on materials and / or assembled articles. An APM “assembled article” offgassing test will be performed before APM acceptance, in order to provide final system level verification of toxicity levels.

Metabolic generation of certain non hazardous gaseous species from the payload is allowed, although presently not accounted for in the APM trace gas contamination analysis (subject of mission analysis).

Payload materials normally exposed to the APM environment shall be preferably selected from approved PMP lists (Data for Selection of Space Materials, MAPTIS database, etc.). In this case the payload shall provide offgassing information (type and generation rates of emitted products) as derived from results of relevant material screening tests, via proper budgeting. This will allow a preliminary check of compatibility of the payload offgassing with APM/ISS toxicity requirements. Finally, a payload assembled article offgassing test shall be performed and results provided to the mission integrator for analysis finalization.

Trace gas contamination control inside the payload, to achieve specific mission goals, is a responsibility of the payload developer. Contaminants generated within the payload because of specific experiments shall be rigorously contained and controlled, to safeguard crew, other payloads and the APM / ISS against risks of hazardous contamination. Triple containment shall be implemented for hazardous substances.

DaimlerChrysler Aerospace, Bremen – All Rights Reserved – Copyright per DIN 34

Expected trace gas contamination control tasks to be performed at payload level are summarized as:

- analyze contamination control requirements;
- define, develop and apply trace gas analysis methods and tools;
- determine and provide offgassing properties of materials exposed to the habitable environment, based on analysis and test;
- provide contamination risk information;
- perform contamination analysis or check analyses performed at lower level;
- support contamination control interface requirements definition and verification;
- perform leakage verification analysis;
- perform material / equipment offgassing testing in support of PMP lists;
- coordinate tasks related to secondary contamination effects;
- coordinate inter–disciplinary tasks;
- support contamination control task definitions of operations.

5.12.1.2 PARTICULATES CONTAMINATION

Airborne particulate contamination in the habitable environment, arising mainly from the presence of the crew on board, is controlled at APM level via centralized cabin air HEPA filtration, with the support of adequate cabin air ventilation. Analysis is performed at APM level to predict airborne particulate concentrations in the cabin. Airborne particulate levels as specified. For the purpose of the APM particulate contamination analysis, particulate emissions from payload sources are not considered.

Particulate contamination of the APM atmosphere by the payloads shall be minimized by implementing a payload contamination control program, in which specific particulate generation, exposed surface cleanliness and PMP requirements relevant to this specific aspect are considered. Generation of particles by payload operations and experiments shall be controlled by containment to the maximum possible extent.

Particulate contamination control inside the payload, to achieve specific mission goals, is a responsibility of the payload developer. Contaminants generated within the payload because of specific experiments shall be rigorously contained and controlled, to safeguard crew, other payloads and the APM / ISS against risks of hazardous contamination. Triple containment shall be implemented for hazardous substances.

DaimlerChrysler Aerospace, Bremen – All Rights Reserved – Copyright per DIN 34

Expected particulates contamination control tasks to be performed at payload level are summarized as:

- analyze contamination control requirements;
- define, develop and apply particulate contamination analysis methods and tools;
- provide contamination risk information;
- perform contamination analysis or check analyses performed at lower level;
- support contamination control interface requirements definition and verification;
- perform cleanliness budgeting;
- perform leakage verification analysis;
- coordinate tasks related to secondary contamination effects;
- coordinate inter–disciplinary tasks;
- support contamination control task definitions of operations.

5.12.1.3 MICROBIAL CONTAMINATION

Airborne microbial contamination in the habitable environment, arising mainly from the presence of the crew and possibly the payloads on board, is controlled at APM level via centralized cabin air HEPA filtration, with the support of adequate cabin air ventilation. Analysis is performed at APM level to predict airborne microbial concentrations in the cabin. Airborne microbial levels as specified. For the purpose of the APM microbial contamination analysis, microbial emissions from payload sources are not presently considered. However, once the analysis results are finalized, an “allowance” for payloads can be derived.

Microbial contamination of the APM atmosphere by the payloads shall be minimized by implementing a payload contamination control program, in which specific microbial generation and PMP requirements relevant to this specific aspect are considered. Generation of microbial species by payload operations and experiments shall be controlled by containment to the maximum possible extent. PMP requirements are mainly relevant to the selection of materials exposed to the habitable environment that are resistant to fungal growth. Particulate contamination control requirements (cleanliness, etc.) will contribute to the goal of minimizing risks of microbial growth.

Microbial contamination control inside the payload, to achieve specific mission goals, is a responsibility of the payload developer. Contaminants generated within the payload because of specific experiments shall be rigorously contained and controlled, to safeguard crew, other payloads and the APM / ISS against risks of hazardous contamination. Triple containment shall be implemented by bio–hazardous experiments.

DaimlerChrysler Aerospace, Bremen – All Rights Reserved – Copyright per DIN 34

Expected microbial contamination control tasks to be performed at payload level are summarized as:

- analyze microbial contamination control requirements;
- define and develop analysis methods and tools;
- provide design information to the higher level
- provide microbial contamination risk information;
- perform microbial contamination analysis or check analyses performed at lower level;
- support microbial contamination control interface requirements definition and verification;
- perform material / equipment testing for biocidic effectiveness and material compatibility;
- perform leakage verification analysis;
- establish an operational task list for on–orbit housekeeping and emergency;
- verify cleaning and disinfection tasks prior to launch;
- coordinate inter–disciplinary tasks;
- support microbial contamination control task definitions of operations.

5.12.2 EXTERNAL CONTAMINATION CONTROL

The APM external contamination is determined by several factors relevant to the presence of the APM in the space environment and by mission specific operations. Main example, of special interest for the payload developer and integrator, is venting overboard of payload generated waste gases.

Payload specific activities in support to the fulfillment of the APM external contamination requirements shall include the following:

- analyze external contamination control requirements;
- determine and provide characteristics of waste gas and outgassing properties of materials exposed to vacuum, based on analysis and test;
- provide contamination risk information;
- perform external contamination analysis or check analyses performed at lower level;
- support external contamination control interface requirements definition and verification;
- perform cleanliness budgeting;
- perform leakage verification analysis;
- perform material / equipment testing for TML, RML and CVCM in support of PMP lists;
- coordinate tasks related to secondary external contamination effects;
- coordinate inter–disciplinary tasks;
- support external contamination control task definitions of operations.

DaimlerChrysler Aerospace, Bremen – All Rights Reserved – Copyright per DIN 34

Payload contribution to external contamination is limited to:

- emissions and plumes from the Vacuum and Venting system.
- emissions (outgassing) and plumes from the external payloads.

In this frame, it is the responsibility of the payload to perform external contamination control activities, in compliance with applicable requirements.

DaimlerChrysler Aerospace, Bremen – All Rights Reserved – Copyright per DIN 34

6 PAYLOAD OPERATIONS AND INTEGRATION

The intention of this chapter is to inform prospective European Columbus Users and Payload Developers of payload integration activities, ground and space operations. The term integration is generally applied for all activities the payload will undergo on ground until acceptance for flight. The term ground operations is usually used for payload flight preparation activities, and the term space operations is related to on–orbit payload operation activities.

More detailed information than described in this section can be found in the MSM Operations Processes Documentation, reference document 2.2.9.

6.1 GENERAL DESCRIPTION

6.1.1 THE APM PAYLOAD END–TO–END PROCESS

User related hardware to be used on the APM falls into two basic categories as indicated in figure 6.1.1–1:

- large multi–user facilities (Class–1 payloads), interfacing directly with the APM system at the ISPR interface, at the External Payload Mechanism, or at the SUP interface in case of centre aisle payloads.
- smaller facilities (Class–2 payloads), which may be subunits of Class–1 payloads with ISPR internal I/Fs, add–on experiments, or smaller instruments accommodated in a Drawer Rack, or facilities accommodated on an External Payload Adapter (ExPA).

In general, the selection of Class–1 payloads is made at Agency Programme level and in close coordination with the Space Station partners in order to avoid duplication of hardware. Once a decision for the development of a Class–1 payload is taken, this payload will be developed by industry under contract and financial coverage of the responsible Agency Programme Directorate. The final technical definition and construction of the Class–1 payload is undertaken in close interaction with the scientific and technical advisory teams of the respective User Programmes.

Smaller Experiments are normally provided directly by Users (scientists from universities or researchers from industry). The spectrum of smaller experiments ranges from cartridges, via samples or sensors to smaller instruments accommodated in a drawer of the Drawer Rack. These smaller experiments which are carried by or contained in Class–1 payloads are termed ”Class–2” payloads.

DaimlerChrysler Aerospace, Bremen – All Rights Reserved – Copyright per DIN 34

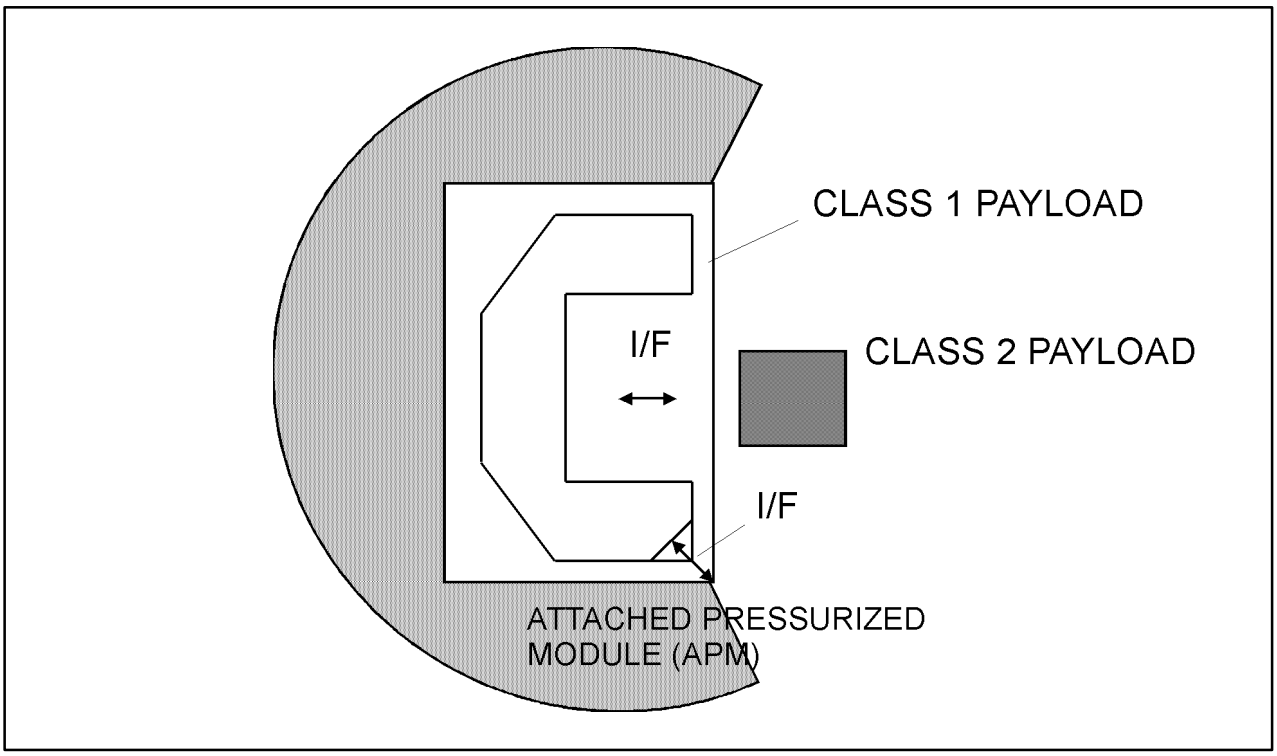

FIGURE 6.1.1–1 DIFFERENT CLASSES OF PAYLOADS

The selection, procurement and processing is different for these two different categories of payloads. They also differ in terms of volume, complexity, cost and development time. Nevertheless the scope and sequence of development cycle activities is very similar for the two classes. Figure 6.1.1–2 indicates the generic payload development flow for Class–1 payloads including its Class–2 equipment.

In general, the payload development and production flow follows the three classical **Phases A, B and C/D** with subsequent system integration, launch preparation, flight operations and postlanding activities. These activities with the corresponding system support tasks, as listed in table 6.1.1–1: Typical Payload Development Cycle, apply for both Class–1 and Class–2 payloads.

DaimlerChrysler Aerospace, Bremen – All Rights Reserved – Copyright per DIN 34

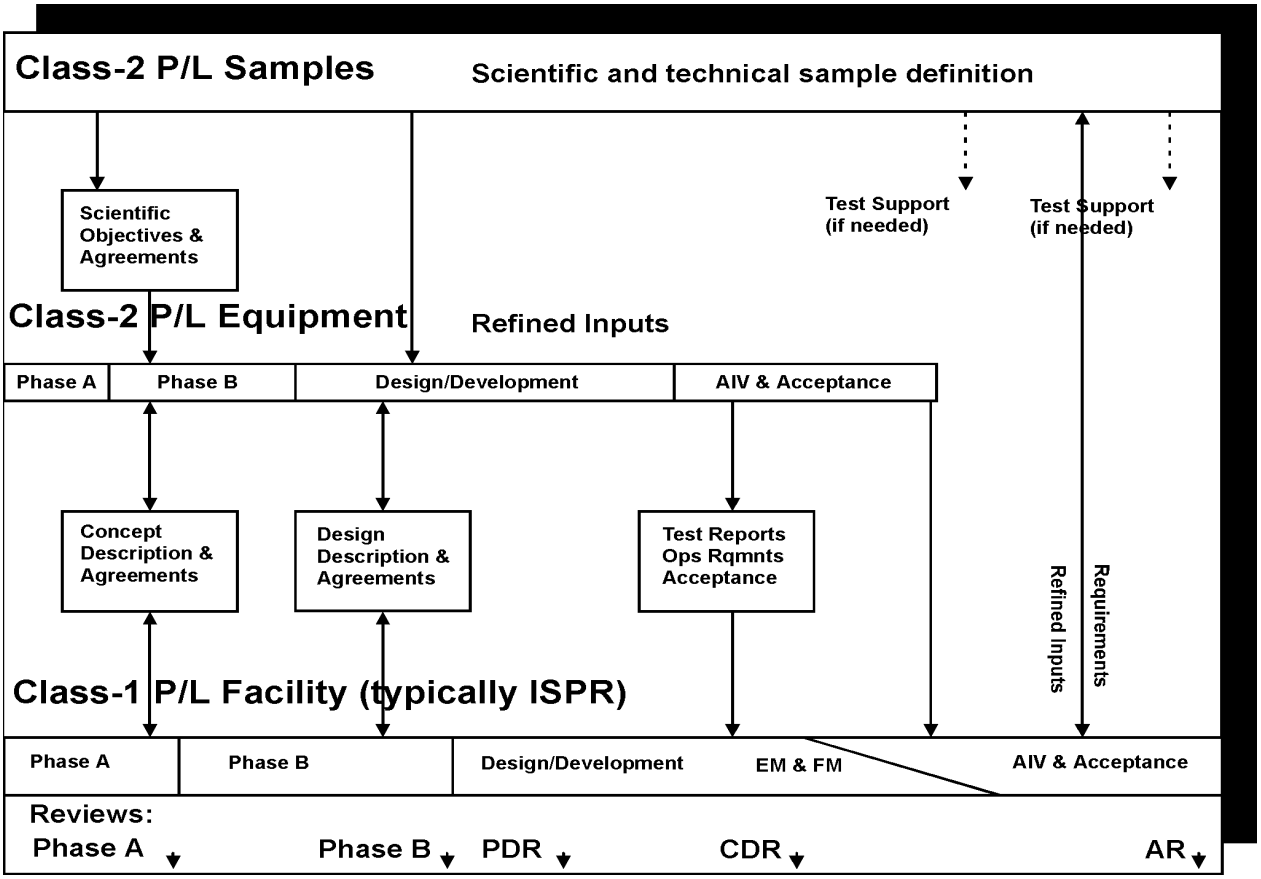

FIGURE 6.1.1–2 PAYLOAD DESIGN AND DEVELOPMENT PROCESS

DaimlerChrysler Aerospace, Bremen – All Rights Reserved – Copyright per DIN 34

TABLE 6.1.1–1 TYPICAL PAYLOAD DEVELOPMENT CYCLE

PAYLOAD DEVELOPMENT ACTIVITIES	SUPPORTING ACTIVITIES
CONCEPTUAL DESIGN	STRATEGIC PLANNING
FEASIBILITY STUDY (Phase A) DESIGN PHASE (Phase B)	TACTICAL PLANNING
DEVELOPMENT QUALIFICATION VERIFICATION SYSTEM COMPATIBILITY TESTING	INTERFACE AGREEMENT ANALYTICAL INTEGRATION OPERATIONS PREPARATION AND PLANNING FINAL ACCEPTANCE/ADP TRAINING
SYSTEM INTEGRATION LAUNCH PREPARATION & LAUNCH	PHYSICAL INTEGRATION LOGISTICS SUPP./FINAL CHECKOUT OPERATIONAL GROUND SEGMENT PREPARATION
ON-ORBIT VERIFICATION ON-ORBIT OPERATIONS RETURN FROM ORBIT	FLIGHT OPERATIONS POST FLIGHT RECOVERY/PROCESSING & ANALYSIS

The main payload integration and operations processes are as follows:

- the Payload Accommodation and Integration Process
- the Payload Operations Preparation and Execution Process
- the Support Activity by User Support and Operations Centres

Payload Accommodation and Integration Process

The *Payload Accommodation and Integration Process* ensures – from conception up to hardware completion – the compatibility of the payload with the APM and the launch vehicle, and the adherence of the payload developer to an earlier defined interface agreement. During the development process such compatibility is achieved via engineering analysis.

Upon completion of the hardware development process this is confirmed via acceptance testing, interface verification and a system compatibility test. Payload Support Activities cover the logistics involved in launch preparations and the launch itself.

DaimlerChrysler Aerospace, Bremen – All Rights Reserved – Copyright per DIN 34

Payload Operations Preparation and Execution Process

The *Payload Operations Preparation and Execution Process* ensures that all the necessary procedures, software and ground–support facilities exist at the time of launch. The corresponding development of procedures, software and ground–support facilities run in parallel with the Payload Development process. During the flight of a particular payload the Operations Execution function directs all necessary support activities which are available on ground, acquires and interprets all engineering and status data, distributes science data to Users and coordinates the necessary telecommanding as well as the voice interaction with the crew.

Support Activity by User Operations Centres

User Operations Centres provide the support function in the payload preparation and operation cycle. Such Centres are planned to be set up by almost all participating countries. In fact several already exist and will be refurbished and further developed for the Space Station. User Operations Centres are defined as follows:

User Centre Definition

(1) User Support and Operations Centre (USOC)
That part of any National Utilization Centre certified by ESA to perform the following functions:

- Decentralised payload preparation and integration (to formal acceptance)
- User familiarisation and training
- User real–time operations

(2) Facility Responsible Centre (FRC)
A National Utilisation Centre certified as a Class–1 USOC for supporting Class–1 payloads, and (possibly) Class–2 payloads. The FRC is responsible for acceptance of physical interfaces of Class–2 payloads relevant to Class–1 payloads, and for the incorporation of Class–2 data into the Class–1 facility acceptance data packages. It is not responsible for the overall acceptance of Class–1 payloads.
APM, ISS and launch vehicle organizations must evaluate the impact of the Class–2 payloads in terms of environmental analysis, operational analysis and safety, particular for Class–2 payloads launched after the facility is in orbit.

(3) User Home Base (UHB)
A single User Home Base to perform real–time experiment operations and associated operational planning.

DaimlerChrysler Aerospace, Bremen – All Rights Reserved – Copyright per DIN 34

The FRCs will have Engineering Models of Class–1 payloads at their disposal. Throughout the pre–launch phase they will use these Engineering Models to familiarize facility Users with the functions and capabilities of these large payloads, they will work the interfaces between Class–1 and Class–2 payloads, and they will develop procedures and support the training of the crew on the Engineering Models. USOCs/FRCs will also undertake Baseline Data Collection and will calibrate samples and specimens to be processed in Class–1 payloads. During flight of a particular facility, the USOC/FRC will operate the facility and assist the user for his/her experiment operations, and the APM–CC in their coordination role making use of the broad knowledge acquired with the hardware during the preparation phase.

The parallel execution of the payload development and support activities is illustrated in figure 6.1.1–3. The top line represents the Utilization Support Activities with the accommodation, integration and logistic aspects of payloads. The bottom line represents the Flight Operations Preparation and Execution Activities to be undertaken by the APM–CC. For the APM these two lines will be uninterrupted for a period of 10–15 years, in fact starting with the development of the first payload and ending at APM decommissioning. The two lines encompass the payload development lines for Class–1 and Class–2 payloads and the line representing the development as well as the pre– and post– launch support obtained from User Support and Operations Centres. Figure 6.1.1–3 also indicates that the initiation and development for Class–1 payloads takes place much less frequently (once in so many years) than the selection and development of Class–2 payloads. Class–1 payload selection, development and preparation for launch will almost be a continuous process during the life time of the APM.

DaimlerChrysler Aerospace, Bremen – All Rights Reserved – Copyright per DIN 34

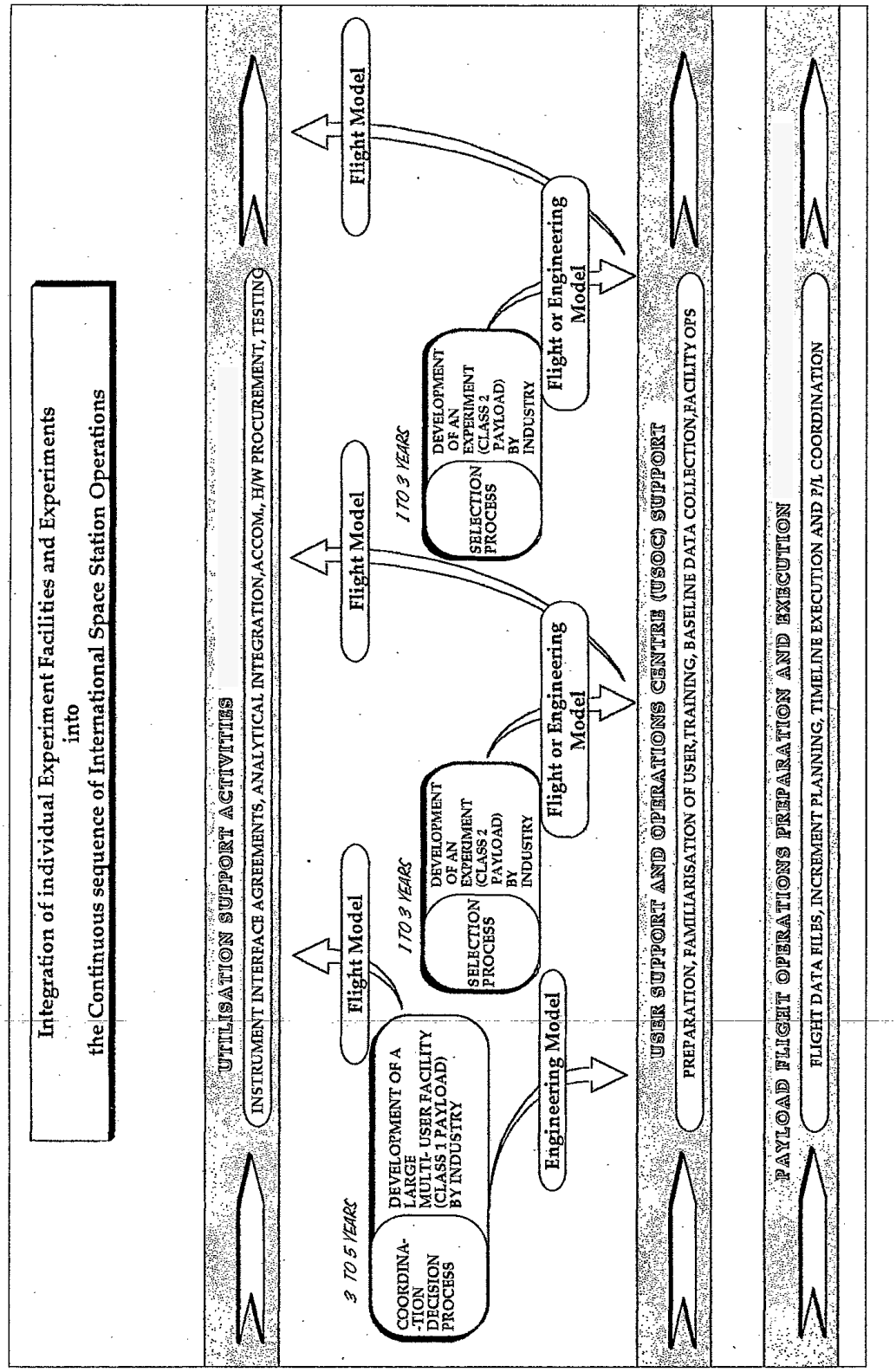

FIGURE 6.1.1–3 PAYLOAD END–TO–END PROCESS

DaimlerChrysler Aerospace, Bremen – All Rights Reserved – Copyright per DIN 34

6.1.2 MANAGEMENT OF THE PAYLOAD END–TO–END PROCESS

ESA will organize, initiate and support the Announcement of Opportunity process, supporting the Payload Selection Board, and provide the results in the European Partner Utilization Plan (PUP).

The management of the Payload End–to–End process, i.e. from the accommodation of instruments on the various ISS elements to the return of products from orbit, is within the overall responsibility of the Utilization Programme Manager (UPM). He will represent ESA in the multilateral User Operations Panel (UOP) and in this role participate in the generation of the Consolidated Operations and Utilization Plan (COUP). In addition to the strategic tasks (PUP, COUP) he/she will also be responsible for the tactical planning tasks such as the development of optional plans for the scheduling of payload operations in various increments based on the COUP, and for optimizing the resources available to ESA. Finally he/she will support the generation of the Increment Definition and Requirements Document (IDRD) – the final task of the tactical planning process.

The two main execution level functions in the Payload End–to–End process concern payload integration, testing and logistics as well as payload operations preparation and execution. The task of integration, testing and logistics will be entrusted to the Payload Accommodation Manager (PAM) and for the task of operations preparation and execution an Increment Operations Manager (IOM) will be appointed.

The PAM will interface closely with the Users of manifested payloads to ensure their compatibility with the existing payload interface inside the APM during the design and development phase. The PAM will direct the work of the APM payload integration site, where payload analytical integration and the final payload–to–system compatibility testing will take place and from where the logistics for the launch preparation will be organized.

The IOM will reside at the APM Control Centre (APM–CC), where he will be in charge of preparing the operations of new payload complements (generation of data files, procedures and timelines) and coordinating the operations of all payloads under his responsibility.

During the orbital life time of a payload for a number of ISS increments, the PAM and IOM will be in charge of coordinating any hardware upload necessary to maintain experiment operations.

They will be supported in their tasks by User Operations teams and industrial support teams (mainly by the APM Engineering Support team, the Payload Integration team and the APM Flight Control team; functions and tasks see next subsection for these teams).

6.1.3 SPACE STATION GROUND SEGMENT

The essential elements constituting the Space Station Ground Segment and the relationship with the Space Station User are shown in figure 6.1.3–1. The main elements, their dedicated personnel and their functions are summarized in table 6.1.3–1.

DaimlerChrysler Aerospace, Bremen – All Rights Reserved – Copyright per DIN 34

The development of payloads by industry takes place under full responsibility and funding from the payload sponsor (ESA User Directorate, National Agency or industry).

According to the current model philosophy (TBC) the following models will be delivered:

Training Model(s) needed at an early stage to optimize the man/machine interfaces. After release by industry, the Training Model will be used intensively to develop in–orbit crew operations procedures and to perform initial astronaut training and familiarization.

Payload Engineering Models will be used to demonstrate the proper functioning of a payload from a performance and interface point of view. Once these demonstrations are complete, these models can be transferred to designated USOCs, where they will be used for activities such as general operations training, procedure development and sample calibration.

Payload Flight Models will implement the technology used for the Engineering Models, and will be built to the ultimate qualification and safety standards. They will undergo acceptance testing and final calibration prior to release to the launch authorities. Upon their release and acceptance by ESA, these models will be transferred to the APM payload integration site where the APM payloads will be integrated. Here they will be tested on the Rack Level Test Facility (RLTF). Following this test and verification process, the payloads will be integrated into the appropriate carriers.

Flight Operations will be carried out in a decentralized mode with the Space Station Control Centre (SSCC) as the focal point for overall System Operations, and the Payload Operations Integration Centre (POIC) as the focal point for payload and User operations.

The APM Control Centre is responsible for APM system operations and coordination of the APM payload operations. The APM–CC interfaces with the SSCC for system operations, and the POIC for payload operations. The APM–CC coordinates the operations of all ESA payloads in the APM. For NASA payloads in the APM it coordinates the resource allocation and APM system support through the POIC, which is the prime interface to the NASA facility and experimenter teams.

The POIC will control the operations of the Space Station Payload Complement at overall payload system level. The APM–CC will coordinate the operation of the entire APM payload at element level. The routing of data from the USA to Europe and the distribution within Europe will be undertaken through the Interconnection Ground Subnetwork (IGS).

The roles of the User Support and Operations Centres are as follows:

DaimlerChrysler Aerospace, Bremen – All Rights Reserved – Copyright per DIN 34

During payload pre–launch activities:

- experiment procedure development support
- sample calibration support
- support to flight and ground crew training for payloads
- support to payload operations simulations
- coordination of facility planning requests and increment planning products

During payload mission execution:

- monitoring and control operations of payload facilities
- coordination of commanding of facility/experiments from UHBs
- processing of facility and experiment data
- supporting the APM–CC in integrated payload operations and planning
- coordination and consolidation of weekly and realtime planning change requests and products
- facility troubleshooting, anomaly resolution support and recovery operation
- ground based experiment support operations

During payload post mission activities:

- support in returned sample analysis
- raw data processing
- dissemination and archiving of data/ video products
- support in “lessons learned” assessment preparation

Astronaut Payload Training will be coordinated from the European Astronaut Centre (EAC) and will also be a distributed function. Payload specific training will depend principally on the representative functioning of the Experiment Training Model at EAC and the Engineering Model at the FRC.

ESA will coordinate industry, the APM Payload Integration Team, the APM Payload Flight Control and Planning Team, the IGS Control Team, User Support Operations Centres, and the Astronaut Payload Training. It will also be responsible for concluding all payload interface and operations agreements, and for carrying out final payload acceptance for flight.

DaimlerChrysler Aerospace, Bremen – All Rights Reserved – Copyright per DIN 34

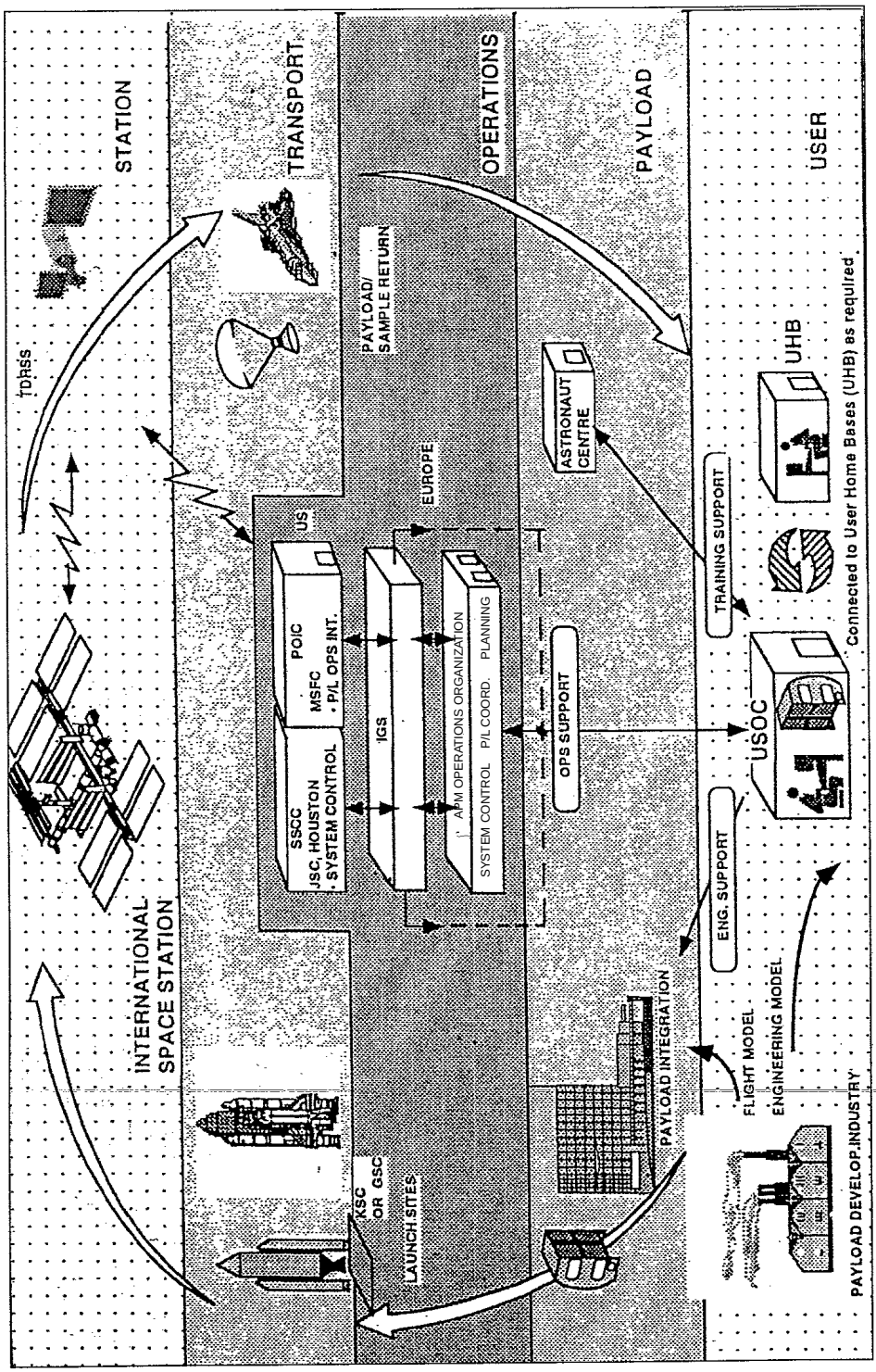

FIGURE 6.1.3–1 SCHEMATIC OF THE SPACE STATION GROUND–SEGMENT

DaimlerChrysler Aerospace, Bremen – All Rights Reserved – Copyright per DIN 34

TABLE 6.1.3–1 SPACE STATION GROUND SEGMENT ENTITIES, TEAMS AND FUNCTIONS

Entity	Personnel/Teams	Function/Tasks
P/L Industry	P/L Developer	Development of payloads
P/L Integration Site	P/L Integration Team (PIT)/ Off–line Engineering Support Team (EST)	ESA P/L developer support; P/L analytical integration; P/L physical integration & ground processing; Integrated P/L Ops product preparation; P/L operations products preparation; Operations planning support; P/L operations execution support; Crew training support;
P/L Operations Control Facility (OCF) at the APM–CC	P/L Flight Control Team (FCT)/ On–line Engineering Support Team (EST)	APM–CC preparation (P/L related); P/L flight operations coordination; Limited real–time payload control; Training of User teams on I/F operations; P/L operations execution support: o Troubleshooting o Modifications to P/L ops products o On–site & remote support o P/L to system interface problems
ESA Mission Management Organization	Mission Management Team (MMT)	Program level management of ESA payloads; Coordination of ESA increment and weekly planning; Development of Columbus OOS and STP; On–site representation in various o Operations Control Facilities (OCFs)
European Astronaut Centre (EAC)	Crew Operations Team (COT)	Crew training; Crew operations planning support; Medical support; Crew support; Crew interface coordination; Operational crew safety;
Logistics Sites	Logistics Support Team (LST)	Operations planning support; ILS & ground processing management; Maintenance & maintenance/supply support; Launch / landing site support; Training support;
User Support and Operations Centres (USOCs); Facility Responsible Centres (FRCs); P/L Ops Control Facilities (OCFs) at the APM–CC	Payload Development and Operations Teams (PDOTs)	FRC/USOC/OCF preparation; Operations planning support; User group coordination; Experiment definition support; Real–time payload control; Operations personnel training; Crew training support; P/L Ops product preparation;
User Home Bases (UHBs)	Users	Utilization of payloads; Science data evaluation;

DaimlerChrysler Aerospace, Bremen – All Rights Reserved – Copyright per DIN 34

Entity	Personnel/Teams	Function/Tasks
Network Management Centre	IGS Control Team (ICT)	Service preparation; Operations planning support; Real–time service provision; Operations team training;
ESA Utilization Organization	P/L Operations Management Team (OMT)	Coordination and utilization management; Contract management; P/L operations planning; P/L integration coordination; P/L ops prep. coordination; P/L training coordination; Science coordination; Announcement of opportunities coordinates; Public relations & promotion;

6.2 PAYLOAD INTEGRATION

Payload Integration encompasses all the functions required to prepare payload developers/users, their payloads and the payload complement for integration, launch, operations on–orbit, return to earth, and return of payloads to their providers. It is performed on Station level, element level, launch vehicle and logistics carrier level, and on individual payload level. Station level Payload Integration is performed by NASA with the participation of ESA and the other International Partners. For the APM and the ESA provided payloads ESA performs element and individual payload level Payload Integration, and provides payload integration data and models to the ISS and launch vehicle cargo integration organizations. Launch vehicle cargo integration for the complete cargo, including systems and payloads is performed by the launch vehicle logistics carrier cargo integration organization.

Payload Integration for the APM can be separated into: Payload Integration Support, Payload Analytical Integration (Element Level), Payload Physical Integration, and Payload Logistics.

To manage the individual payload integration activities an ESA Payload Accommodation Manager (PAM) interfaces on the one hand with the Users/Payload Developers, referred to as PDOTs; and on the other hand with APM Payload Integration, APM Engineering Support, APM Flight Control and IGS Control teams.

US payload racks which may be launched with the APM will be physically installed for launch in Europe. After installation no functional test is foreseen. The details of US payload integration and verification activities related to the APM are covered in the Station Program Implementation Plan (SPIP), ref. doc. 2.2.10 .

To simplify the payload integration and operations processes a classification of payloads (ref. to para. 6.1.1 of this document) has been introduced. The class 1 and class 2 payloads will be developed, operated and maintained by the PDOTs; class 1 payload teams coordinate with the teams responsible for the class 2 payload associated to their facility. Operations of the ESA facilities will be conducted and/ or coordinated by these PDOTs from Facility Responsible Centres or from user rooms at the APM–CC.

DaimlerChrysler Aerospace, Bremen – All Rights Reserved – Copyright per DIN 34

During the preparation and integration phase the Payload Accommodation Manager (PAM) as member of the ESA Operations Management Team (OMT) will be the prime interface to the PDOTs.

In this function the PAM will be supported by the Payload Integration Team (PIT), which will provide and coordinate the necessary technical support from APM Engineering Support and Logistics Support, where applicable.

A Customer Documentation Tree has been defined to support the integration processes into the Space Station physical and operations environment (CDT, see Fig.6.2.1–1). It comprises a comprehensive set of documents that represent requirements, integration and payload accommodation data that ensure safety and interface compatibility, as well as operability within the Space Station resources and constraints. These documents are applicable to all users of the ISS and have been developed to be consistent with vehicle and transportation system documentation. All phases of payload integration and operations including ground integration and de–integration, launch and landing, and on–orbit integration and operations are covered by the documents defined in the CDT.

6.2.1 PAYLOAD INTEGRATION SUPPORT

Individual Payload Integration Support activities can be broken down into: User interfacing, payload data collection, payload safety, and payload Certification of Flight Readiness. These activities provides inputs to all phases of the payload integration process.

DaimlerChrysler Aerospace, Bremen – All Rights Reserved – Copyright per DIN 34

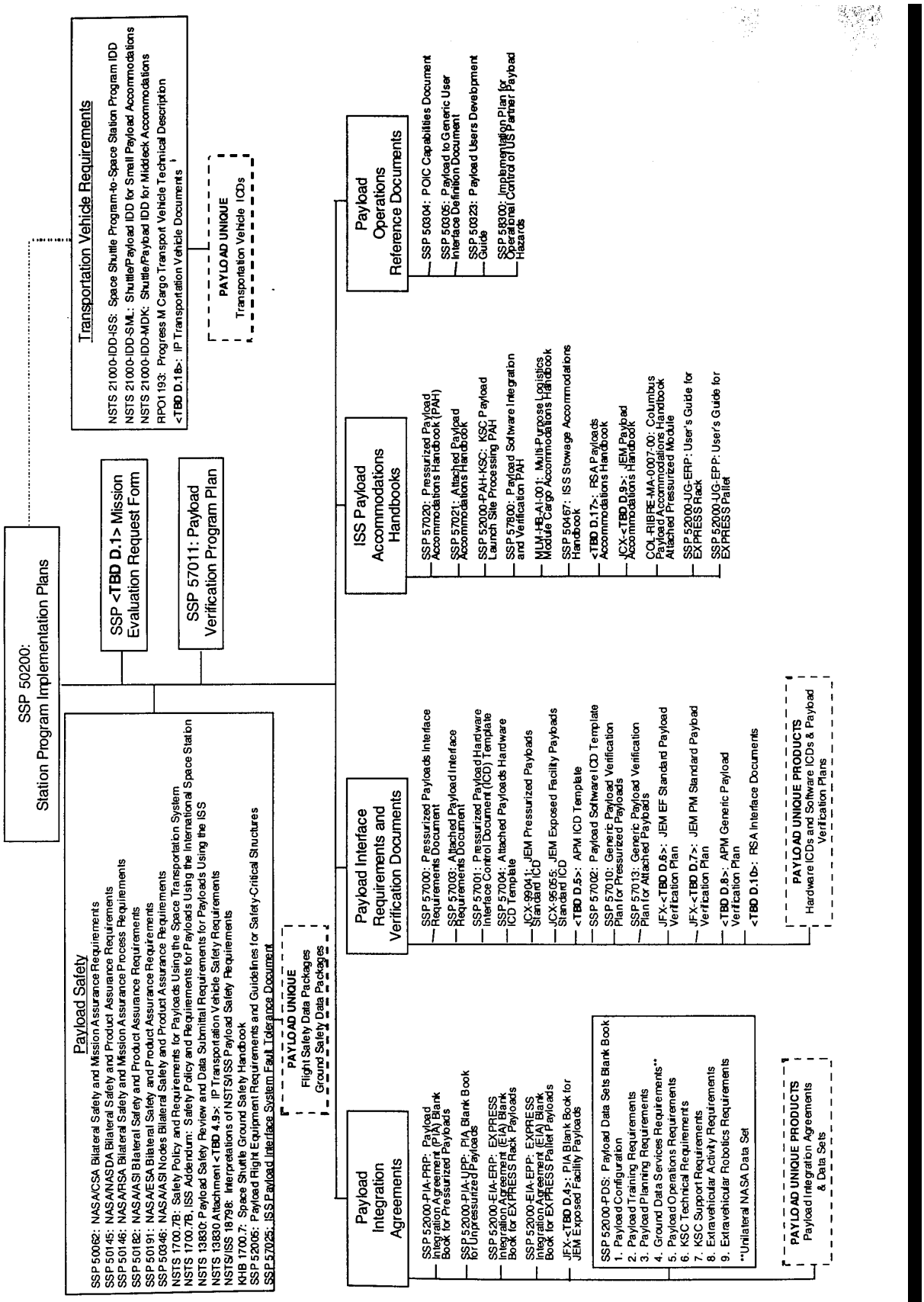

FIGURE 6.2.1–1 CUSTOMER DOCUMENTATION TREE

DaimlerChrysler Aerospace, Bremen – All Rights Reserved – Copyright per DIN 34

6.2.1.1 USER INTERFACING

The PAM initializes the interface with the PDOT/User and the subsequent development of the Payload Interface Agreement (PIA) and the payload to APM unique Interface Control Document (ICD).

These products are required to support the Increment Definition & Requirements Document (IDRD) development and Increment Integration activities after the IDRD is baselined. The PAM works the interface for payload integration and operations with support of the various Programme teams (e.g. Payload Integration, Engineering Support, Flight Control)

The PAM will ensure that the payload requirements are accurately defined and documented, compatible with the APM and Space Station accommodations and properly implemented. He also coordinates any engineering/technical support as required and provides the PDOTs/Users with all the Space Station documentation necessary for them to design, develop, and operate the payload according to requirements. This documentation comprises the appropriate documents from the Customer Documentation Tree defined in figure 6.2.1–1.

Interface requirements for pressurized payloads are covered by the Columbus Pressurized Payloads Interface Requirements Document (R.D. 2.2.18). Interface requirements for external payloads are covered by the Columbus External Payloads Interface Requirements Document (R.D. 2.2.19).

6.2.1.2 PAYLOAD DATA COLLECTION

The major payload data collection products are the:

- Payload Interface Agreement (PIA) and PIA Addendum
- H/W and S/W Payload to APM Unique ICDs
- Payload Verification Plan (PVP)
- Payload Data Sets (PDS)

Payload Integration Agreement (PIA)

Agreements between ESA and the PDOTs are documented in the Payload Interface Agreement (PIA) which is developed in the same timeframe as the Payload to APM unique ICD (see above).

The purpose of the PIA is to document agreements made between the Station Program (represented by ESA) and the Customer concerning Space Station resources, capabilities, and services required to provide the Payload with accommodations to, from, and on–board the ISS. The PIA also documents programmatic and detailed technical agreements that need to be made prior to the start of Payload Data Set development in order to minimize the impact on the Customer’s budget process and/or the payload integration schedule and resources.

DaimlerChrysler Aerospace, Bremen – All Rights Reserved – Copyright per DIN 34

The PIA will be negotiated between the ESA OMT, the Payload Sponsor/User and the payload developer. The agreements in the PIA and its Addendum provide inputs to Tactical Planning, including Payload description and objectives, requirements about manifesting, on–board placement, on–board resource allocations, top–level training and operations; ground system, logistics and maintenance. The programmatic data include Payload Sponsor and ESA/Space Station Programme contacts, separate and joint responsibilities, schedules for the development of the payload and its models, payload item delivery, payload reviews, and Data Sets delivery; and long lead items including operations planning assignments, and Standard Payload Outfitting Equipment (SPOE) requirements.

The PDOTs will cross check their data with the IDRD resource allocations for ESA prior to PIA baselining. The Increment Operations Manager's schedules will be used to determine the need dates for the Data Sets deliveries, and documented in the PIA.

Once baselined the PIA is put under configuration control; unless revised these agreements remain in effect through integration, launch, on–orbit installation, operations, and return of the payload to the Customer.

The PIT will perform the custodianship for the PIA documents on behalf of the ESA PAM.

H/W and S/W Payload to APM Unique ICD's

The Columbus Payload ICD Template documents serve as Blank Books for the development of the Payload to APM unique ICD's. For pressurized payloads the Columbus Pressurized Payloads Hardware ICD Template (R.D. 2.2.22) and the Columbus Payloads Software ICD Template (R.D. 2.2.23) is applicable. For external payloads the Columbus External Payloads Hardware ICD Template (R.D. 2.2.24) and the Columbus Payloads Software ICD Template (R.D. 2.2.23) is applicable.
The unique ICDs, developed under the responsibility of the PAM, define and control the design of interfaces between the APM and the payloads concerning the interfaces to the ISPRs and External Payloads.

The interface description will include mechanical, structural, thermal, avionics, software and functional interfaces, and will apply to the transportation and on–orbit phases of the APM payload. Based on the operational concept, telecommand/telemetry parameters, FLAP and other entries in the APM MDB, will be documented in a dedicated annex to the S/W ICDs.

The Payload Integration Team will have book management responsibility for the development and maintenance of the ICDs and for schedule and requirement development of the associated Payload Verification Plans (PVPs) on behalf of the PAM. This definition process will start at the beginning of the payload development (C/D phase) and will progress through the payloads' PDRs and CDRs, leading to baselined ICDs after the CDRs. The results of the APM element analytical integration will be progressively filled in by the PIT and the ICDs will be finally issued and signed–off by the PAM, the PDOT Representative and by the APM Engineering Support Team.

DaimlerChrysler Aerospace, Bremen – All Rights Reserved – Copyright per DIN 34

Payload Verification Plan (PVP)

The Unique PVPs will define the complete set of verification activities necessary to ensure compliance with the pressurized payload design requirements specified in the APM Pressurized Payloads IRD.

The Unique PVPs will also address, in a dedicated annex, the verification requirements for payload hardware that will be launched/returned and/or operated in the Orbiter Mid deck.

The Unique Payload Verification Plan's structure and format will be based for ISPRs on the Columbus Pressurized Payloads Generic Verification Plan (R.D. 2.2.20).
The Unique Payload Verification Plan's structure and format will be based for External Payloads accommodated on an ExPA on the Columbus External Payloads Generic Verification Plan (R.D. 2.2.21).

The Unique PVPs will contain Verification Data Sheets (VDSs) providing instructions, definitions, references and guidelines for the verification activities associated with each payload design requirement contained in the COLUMBUS Payload IRD.

The Verification Data Sheets will describe what steps should be taken by the Payload Developer to verify that the payload hardware and software satisfy the specific IRD requirements.

The Payload Integration Team will develop the Unique PVPs for the APM launch and follow–on payloads.

Payload Data Sets (PDS)

The data required from a payload to enable its integration into the physical and operational

environments of the APM/Space Station are called the Payload Data Sets. These data sets which represent the detailed technical requirements in accordance with the Payload PIA and contain the engineering, integration and operational details agreed upon by the PDOTs and the PAM.

Based on the Payload Data Sets Blank Book, Payload Unique Data Sets will be prepared. All the required PDS data will be delivered by the PDOTs in accordance with the agreed schedule and will be implemented in the Payload Unique Data Sets by the Payload Integration Team.

These data and requirements will be used for integration activities such as Tactical Planning, Payload Analytical and Physical Integration, and Payload Operations Integration as well as for Payload Training and ground communications.

For APM payloads, these data sets are entered into the ESA payload data base which is part of the Mission Management Support Tools (MMST) and accessed via the WWW. This interface enables other teams to gain access to the data sets they need.

DaimlerChrysler Aerospace, Bremen – All Rights Reserved – Copyright per DIN 34

For NASA payloads, the data sets are entered into the NASA Payload Data Library (PDL). However these datasets are compatible to support information excahnge between datasets.

The requirements and data sets will be updated as needed following the payload reviews.

For APM payloads, the PAM supervises this process and provides configuration management of the data sets. For NASA payloads, the NASA Payload Integration Manager (PIM) performs a similar function.

The data set categories (TBC) are as listed:

- **Utilization Tactical Planning Parameters (PIA Addendum)**

  This data set consists of payload description and objectives, manifesting requirements, on board placement requirements, and top–level operations requirements including Station level resources requirements. It is used by the OMT Tactical Planners to prepare the ESA inputs to the IDRD process.

- **Payload Configuration Data**

  This data set documents the configuration of the payload for ascent, on–orbit, descent; it includes sketches and drawings, electrical and thermal interface schematics, mass properties, stowage requirements, etc.

  The data will be used for Payload Analytical Integration, for Cargo Integration into external cargo carrier as well as the MPLM or the Orbiter Middeck.

- **Payload Training Requirements**

  This data set documents the requirements for user–provided and user/ESA and ISS Program–provided payload training for ISS crew members and ESA Ground Support personnel, as well as ESA requirements for training of user personnel. This data set is used by the Crew Operations Team, and the FCT to develop the payload increment training plans.

- **Ground Data Services Requirements**

  This data set documents the ground systems and communications requirements for supporting the on–orbit operations of the payload. The FCT uses this data and provides inputs to the IGS Control Team to prepare the communications schedules.

- **Payload Operations Requirements**

  This data set defines the requirements needed to prepare, conduct and support the execution of on–orbit Payload Operations. The teams responsible for operations preparation use this in the development of their products.

- **Ground Integration/De–integration Requirements**
  (Payload Technical Requirements/Payload Support Requirements)

DaimlerChrysler Aerospace, Bremen – All Rights Reserved – Copyright per DIN 34

This data set documents the integration and ground processing requirements in Europe, and the launch and landing site processing requirements related to pre–launch and post–landing activities. The requirements include verification, inspection and test activities, assembly, installation and test requirements, payload physical integration, site interfaces and resources, deliverable items lists, support services and equipment, ground processing, access and contingency activities. It also specifies ESA and/or Station coordination requirements prior to hardware delivery, transportation, payload integration, the payload to APM and/or other Station interface testing, launch operations, and post–landing operations. Included in this data set are payload equipment items to be launched/returned for the specified increment and any late pre–launch installation or early post–landing retrieval. The data is used by the Payload Integration Team to generate integrated launch/landing site plans and integrated payload requirements on the European integration site(s) and the launch site organizations.

- **Extra Vehicular Activity (EVA)**

  This data set documents the hardware and operations support requirements and specific design configuration details for each payload hardware to Station interface associated with the planning of EVA support to a payload. User data inputs include location and configuration of payload unique EVA translation paths, EVA worksites, and identification and source of payload EVA hardware.

- **Robotics Requirements**

  This data set documents the hardware and operations requirements and specific design configuration details for each hardware to Station interface associated with the planning of Extra Vehicular Robotic (EVR) support of a payload. User data inputs include location and configuration of payload unique EVR access, EVR worksites, and identification and source of payload EVR hardware.

6.2.1.3 PAYLOAD SAFETY

Payload Safety is an integral part of the payload development process and includes safety issues for on–orbit as well as on ground equipment and phases. The safety documentation applicable to the payload developer is defined in chapter 9. The identification of hazards and the implementation of hazard controls are described and identified in the Ground and Flight Safety Data Packages. These data packages are prepared by the PODTs

Ground Safety Data Packages presentation and the execution of appropriate Ground Safety Reviews are performed in order to ensure that the payloads and their ground support equipment can be operated and transported on the ground in a safe and secure manner without unacceptable risk to ground and operations personnel or equipment. Ground Safety Data Packages contain ground support drawings (dimensions, weights,etc.), ground transportation equipment drawings (safety factors, performance margins, etc.), ground operational requirements, tools and potential transportation risks.

DaimlerChrysler Aerospace, Bremen – All Rights Reserved – Copyright per DIN 34

Flight Safety Data Packages presentation and the execution of appropriate Flight Safety Reviews are prepared and executed in order to ensure that payload can be installed, tested, handled and operated in space in a safe and secure manner without creating unacceptable risk or hazards for the flight crew or flight equipment. Flight Safety Data Packages contain payload functional descriptions, design drawings and pictures, which give evidence of potential mechanical hazards (sharp edges, etc.) and implemented design features, to eliminate hazardous events or safety–wise catastrophic or critical consequences. The implementation of inhibits, interlocks, barriers providing physical interruption to energy sources, and safety devices should be documented. They also contain lists of materials, liquids, gases, and chemicals in order to assess the contamination risks that accompany the payloads.

Integrated Safety Data Package:
After approval these safety data packages are input to the ISS Safety Review Data Packages for review by the Integrated Payload Safety Review Panel and to the Payload Integration Team/APM Engineering Support Team for APM element integration and ISS integrated payload Safety Reviews.

The payload unique safety data package development and delivery schedule is linked to the payload unique reviews: Preliminary Design Review (PDR), Critical Design Review (CDR), Preliminary Acceptance Review (PAR), and Final Acceptance Review (FAR) which are described in the next paragraph.

6.2.1.4 PAYLOAD CERTIFICATION OF FLIGHT READINESS

The CoFR process certifies successful completion of payload development activities that are required to ensure the safety and operational readiness of the flight H/W and S/W, ground segment, operations control facilities and the personnel that support pre–launch, launch/ return, and on–orbit operations. The payload readiness for transportation in the launch vehicle and operation on ISS is also covered by the CoFR process.

The payload sponsor/developer has the overall responsibility for the P/L design, its manufacturing and testing. However, formal reviews will be held for class 1 payloads to ensure the physical and operational compatibility with the space and ground segment and the programme schedule. The appropriate review data packages will be made available by the payload developer.

Preliminary Design Review (PDR)

The PDOTs are responsible for establishing the functional requirements of the experiment, the preliminary design and demonstrates its compatibility with its external physical and functional interfaces that include safety, environmental condition compatibility and required ground or flight support services. At this point the applicable Payload Data Sets are defined and the PIA is signed.

The PAM, the PDOT and the PIT agree on the payload integration schedule, and the applicable Payload Data Sets.

DaimlerChrysler Aerospace, Bremen – All Rights Reserved – Copyright per DIN 34

Critical Design Review (CDR)

The payload developers are responsible for completing the detailed design and providing data (enhancements of data provided at previous review) to further demonstrate its compatibility with its external physical, functional, and operational interfaces including safety and environmental condition compatibility.

Prototype H/W and S/W may already be available. At the conclusion of the CDR, the payload design, its ICD, PIA main volume and the Payload Verification Plan (PVP) will be baselined and the Payload Data Sets will put under configuration control by the PAM.

The ICD is signed by the PAM and the representatives of the PDOT and the APM Engineering Support Team.

Preliminary Acceptance Review (PAR)

The performance of the payload and the compliance with the agreed to documentation are assessed at the PAR. The PIT reviews the acceptance test results and the payload as built configuration with ICD, PVP and the data set. It has to be demonstrated that the engineering analyse matches with the test results. After successful completion of this review, the payload is delivered to the PIT for interface verification and APM system compatibility testing on the RLTF.

Flight Acceptance Review (FAR)

After the interface verification and APM system compatibility tests have been performed, the test results are reviewed for compliance with the ICD. The successful completion of this review leads to transportation of the payload to the cargo integration/ launch site for integration into the launch carrier. The FAR results are provided by the PIT to the OMT for the ORR.

All the review data packages and the associated results become part of the payload's acceptance data pack (ADP).

Safety data packages and implementation of hazard controls are part of these reviews.

For Class 2 payloads the CoFR process is conducted in the same sequence but the PDOTs involvement is mainly via updates of the corresponding class 1 payload's documentation.

DaimlerChrysler Aerospace, Bremen – All Rights Reserved – Copyright per DIN 34

6.2.2 PAYLOAD ANALYTICAL INTEGRATION (ELEMENT LEVEL)

After the release of the IDRDs for a specific preliminary planning period, the APM Engineering Support team starts the APM element level payload analytical integration (PAI) which comprises element level design & analyses, element level verification analyses, and element level payload software integration and verification. The first iteration is based on the preliminary IDRD and preliminary Payload Data Sets, but the results provide a valuable feedback into the payload development and baseline IDRD development processes. A further iteration is performed after release of the baseline IDRD and updating of the Payload Data Sets, and this forms the basis for the Payload Complement Integration Review (PCIR). Updates to the element level analytical payload integration are performed as necessary if significant changes in the payload or element characteristics are identified.

6.2.2.1 APM PAYLOAD INCREMENT DESIGN & ANALYSIS

APM P/L increment design and analyses will be conducted by the APM Engineering Support team with support of the P/L Integration team. This process is a systematic evolution of payload requirements into payload integration agreements between a payload and the Station Program. Each engineering discipline performs a unique increment design analyses based on the configuration of the APM subsystems and the configuration and requirements of payloads.

Specifically the increment design analyses of the integrated payloads into the APM/Station system requires a number of analytical tasks, and the resulting Payload Analytical Integration (PAI) products and assessment are outlined below.

The rack level design analysis and models will be delivered to the PIT by the PDOT. The rack models will also be delivered to the launch vehicle organization for the launch vehicle analytical integration.

Within the framework of the analytical APM payload integration the following main tasks will be performed:

- Generation of an ”Integrated Payload Requirements, Analyses, Assessments and Results Document” which documents the results of the payload complement analytical integration (PAI) process
- Definition of the APM Payload Complement including:
  - Resource Budgeting & Control
  - Functional Definition
  - Failure Management
  - Mechanical Configuration Definition
  - Power Distribution
  - Data Management H/W and Functional Configuration Definition
  - Active Thermal Control/Environmental Control/Vacuum & Venting/N2 Supply Definition
  - Integrated Stowage Definition
  - Servicing and Maintenance Definition

DaimlerChrysler Aerospace, Bremen – All Rights Reserved – Copyright per DIN 34

- Preparation of Compatibility Assessments comprising
  - Structure–dynamics/Interface Loads
  - Configuration/Handling/Clearance
  - Thermal and Environmental Control
  - Power Distribution
  - Complement EMC Analysis
  - Electrical Interface Circuits
  - Micro–gravity Environment
  - Audible Noise
  - Data Management Subsystem

- Integration of Complement Level Flight and Ground Safety Data Packages

6.2.2.2 PAYLOAD SOFTWARE INTEGRATION AND VERIFICATION

Integration and verification of payload facility computer software is a payload developer responsibility, and this also includes software on payload private laptops where implemented.

For payload software running on the APM PLCU or laptop, the PDOT will deliver the necessary data to the Payload Integration team for integration and verification activities.

The APM Engineering Support Team will receive from the PIT the implementation requirements for:

- displays to status monitoring of the entire P/L complement, and any critical payload functions
- commands/command sequences for the controlled shutdown and/or mode changes of payloads
- generic inputs to the APM MTL
- telemetry packets for ”health and status” monitoring for use by the Flight Control Team and the POIC,
- communication services
- any other COLUMBUS DMS support services required by the payloads,
- Payload Operations Data File (PODF) basic inputs (sequences, locations, codes, etc).

The NASA Payload Engineering Integration (PEI) will provide the requirements for the US payloads in COLUMBUS via the Payload Data Library (PDL).

All requirements will be provided to the APM Engineering Support Team for integration into the APM S/W environment and subsequent implementation into the Mission Data Base (MDB). The APM Engineering Support Team will deliver MDBs for each increment. Updates will be progressively made until the final MDB release at the Operations Readiness Review (ORR).

DaimlerChrysler Aerospace, Bremen – All Rights Reserved – Copyright per DIN 34

Payload final interface verification and compatibility testing (on Rack Level Test Facility) and APM payload complement testing with the flight versions of the MDB, will verify that all payload software and data components have been defined properly and this will be performed by the Payload Integration Team.

6.2.2.3 APM PAYLOAD COMPLEMENT VERIFICATION

Verification Planning

The Integrated Payload Complement Verification Plan identifies analyses, tests and inspections required to assure compatibility of the APM payload complement with the APM systems. These tests, analyses and inspections or any combination verify that the payload complies with applicable interface specifications and that safety hazard controls are in place.

The integrated payload complement verification plan is initially published after IDRD baseline (L–24) and subsequently baselined. Verification closeout conducted by the ESA Product Assurance & Safety (PA/S) Organization will be completed as a prerequisite for flight certification at the Payload Complement Acceptance Review (PCAR) prior to integration of the APM and its launch payload complement into the Space Transportation Vehicle.

At this review the PIT will demonstrate the successful completion of the P/L complement integration and system test activities.

The results of the integrated payload complement verification become part of the manned base payload complement verification.

After launch of the APM, payload complement verification analyses for each increment will be performed following significant flight/ ground configuration changes.

Verification Control

The actual and successful verification execution will be documented and controlled in a systematic way. This will be ensured by completing the verification matrices of the Verification Plan and will be perfomed by entering the corresponding procedures, reports, analyses, etc. with validation entries. This control demonstrates in a positive way the proper execution of the planned verification and is the prerequisite for the final certification of the hardware and software.

The overall template of the integration activities is depicted in figure 6.2.2.3–1, European Payload Integration Template.

DaimlerChrysler Aerospace, Bremen – All Rights Reserved – Copyright per DIN 34

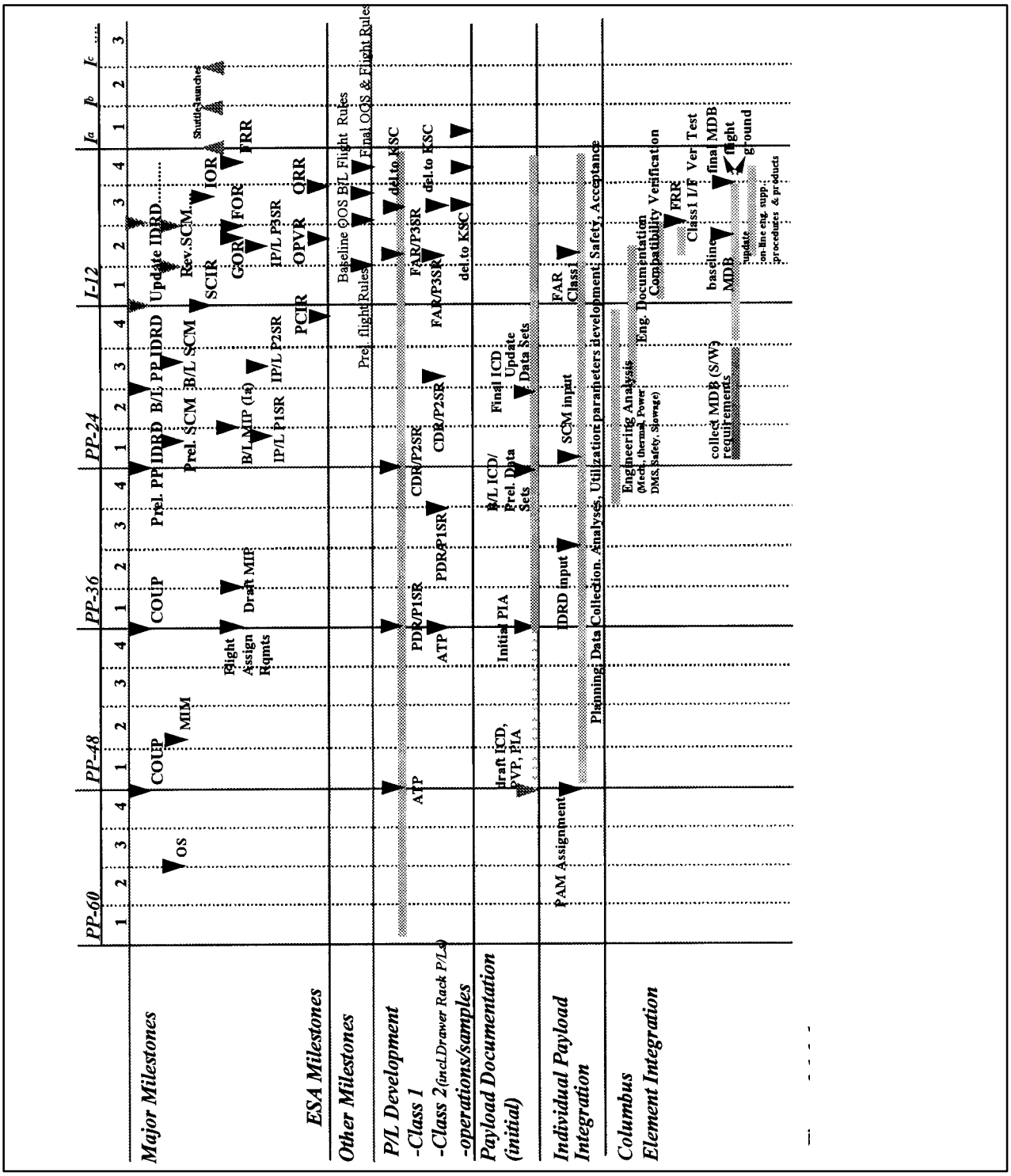

FIGURE 6.2.2.3–1 EUROPEAN PAYLOAD INTEGRATION TEMPLATE

DaimlerChrysler Aerospace, Bremen – All Rights Reserved – Copyright per DIN 34

6.2.3 PAYLOAD PHYSICAL INTEGRATION

The APM Payload Physical Integration task includes the physical integration and verification of the APM Payload Complement, as specified in the Payload Verification Plans (PVPs).

6.2.3.1 PHYSICAL INTEGRATION OF THE APM LAUNCH PAYLOAD COMPLEMENT

Physical integration of the APM launch payload complement which nominally consists of five ESA payload facilities (BIOLAB, FSL, EPM, EDR and ESR) , and commences with the delivery of the hardware to the RLTF interface verification site.

Prior to payload delivery, the Payload Integration Test Team will have established the test configuration, which essentially consists of the test set–up preparation for the Rack Level Test Facility (RLTF).

Following payload deliveries, the fully assembled P/L racks are connected one by one to the RLTF for verification of the APM system interfaces and payload hardware and software compatibility testing (referred in the following as RLTF Interface Tests). The payload –to– APM subsystem/system interfaces are as defined in the ”Payload–unique Interface Control Documents” (ICDs).

The RLTF Interface Tests are followed by each payloads’ Final Acceptance Reviews (FARs, refer to para. 6.2.2.3: Payload Certification of Flight Readiness) to demonstrate the completion of the payload qualification process and its readiness for APM physical integration and organized by the PDOTs. The Payload Integration Team will present the RLTF interface test results.

The RLTF Interface Tests are followed by the physical installation of the payload racks into the APM at the payloads flight position and is performed by the APM C/D Contractor.

In order to verify the APM flight interfaces the payload racks will be powered–up and verified (short functional test).

After all complement payload interfaces to the APM subsystems/systems have been successfully tested, the APM Integrated System Test/MST will be started. This integrated system test involves the APM and all the individual payloads. The aim is to demonstrate the overall system compatibility by operating the entire payload complement in mission–like sequences with high resource demands using flight procedures to the maximum extent possible.

The APM P/L Interface Tests and Integrated Test/MST are followed by the Payload Complement Acceptance Review (PCAR), organized by the APM C/D Prime Contractor, to demonstrate the successful completion of payload complement integration into the APM and the release of the payload complement inputs to the Phase 3 Payload Safety Review package. The Payload Integration Team will present the APM P/L Interface and APM Integrated System Test/MST test results.

DaimlerChrysler Aerospace, Bremen – All Rights Reserved – Copyright per DIN 34

After successful completion the APM is put into its launch configuration by the APM Development Contractor and delivered with its initial payload complement to the launch site. The integrated APM will then be handed over to the launch site authorities for further processing and integration into the NSTS.

Whilst the physical integration into the APM, done by the APM C/D contractor, is very important, the major events include of course, the necessary payload to APM interface tests as described above.

The overall APM Launch Payload Integration & Test flow is illustrated in figure 6.2.3.1–1.

The APM EGSE supports these integrated system tests during the commanding, processing and display of data defined in the APM DMS processing nodes including the PLCU. The payload developers need to complement the integrated test configuration with their payload EGSE. The payload EGSE interface with the APM EGSE FDDI network and will gain access for payload commanding and medium / low rate telemetry processing. It should be understood that the APM EGSE will only support the actual routing of payload command packets having their source in the payload EGSE, or routing of medium / low rate telemetry packets for further processing in the payload EGSE.

For payload high rate data a direct interface to the High Rate Demultiplexer (HRDM) is provided which is an integral part of the APM EGSE. The HRDM provides for payloads 10 bitstream outport ports and one video output port available to the individual payload EGSE. The payload EGSE can be directly connected to these ports for access to the high–rate data. Processing of payload high–rate data is totally handled by the payload provided EGSE.

For payload video data the output on one of these ports is routed to the VDPU Test Equipment (VDPU–TE) for the evaluation of on board video pictures and the decompression of video data which it receives on one high–rate bitstream channel from the High–Rate Demultiplexer. A corresponding analogue composite video electrical signal, conforming to the NTSC standard, is then made available to the payload EGSE on a single channel. The transmission of the video signal on ground to the FRCs for real–time operations will be descibed in the ground segment doccumentation.

For further details of payload EGSE interfaces and requirements, refer to para 7.2.2.

The equipment which will be used for the pressurized payloads to implement the major payload facilities and payload complement tests is the Rack Level Test Facility (RLTF) described in section 7.5.

The RLTF is considered to be the formal verification tool for functional testing of payload to system interfaces. The test facility represents the APM system and supports the increments‘ flight environment by operating the increment specific Mission Data Base (MDB) update and the necessary simulation models. It provides all APM system interfaces necessary to run a complete mission simulation test with the capability of simulating payloads and the entire payload complement by software as far as necessary.

DaimlerChrysler Aerospace, Bremen – All Rights Reserved – Copyright per DIN 34

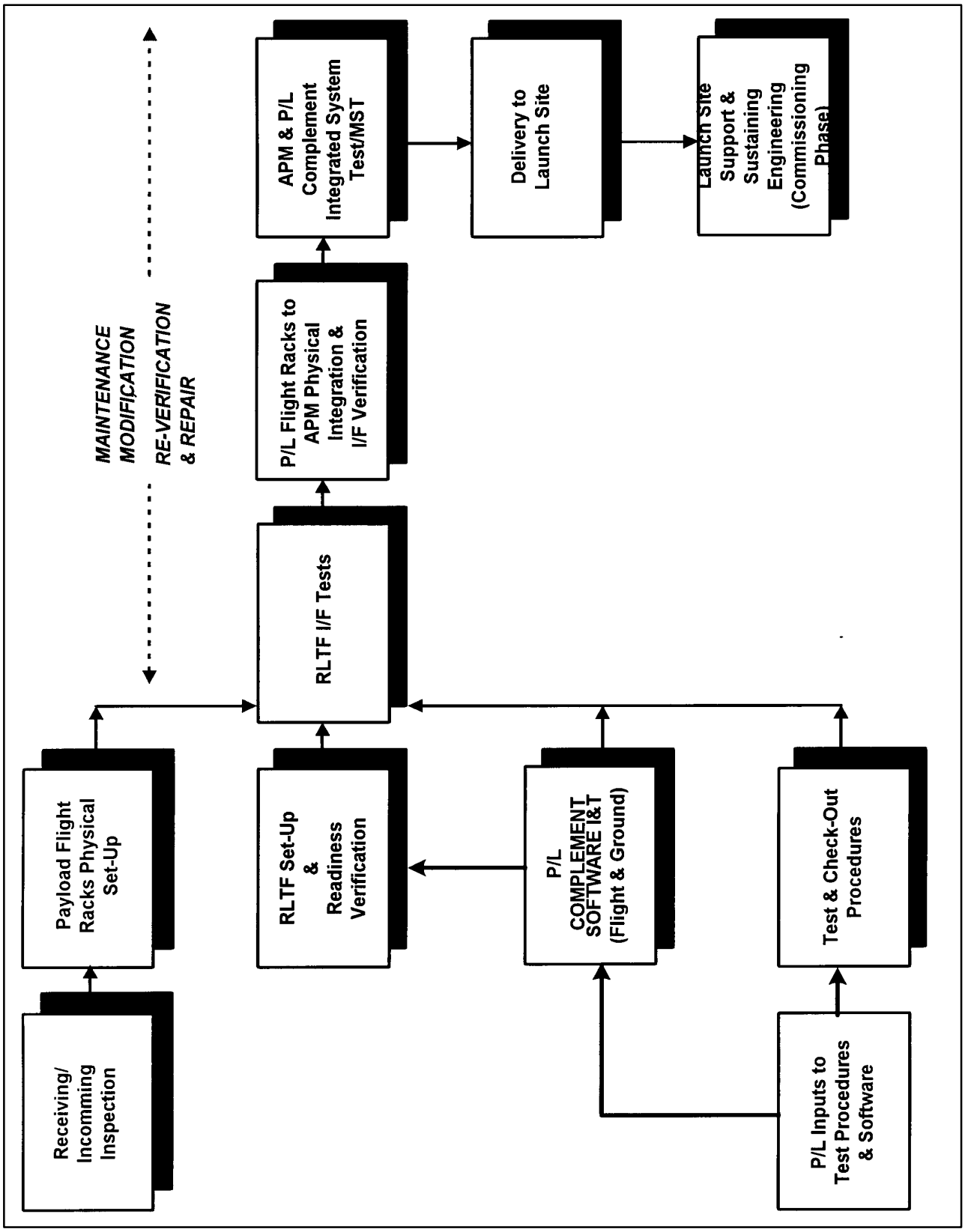

FIGURE 6.2.3.1–1 APM LAUNCH PAYLOAD INTEGRATION & TEST FLOW

DaimlerChrysler Aerospace, Bremen – All Rights Reserved – Copyright per DIN 34

Further key elements for the successful APM payload complement integration process include the generation of the payload related APM mission flight image and the subsequent utilization of the actual mission flight software during the IST/MST. The final generation cycle to build the actual mission flight image, that is finally loaded onto the APM Mass Memory Unit (MMU), is under overall management of the APM Engineering Support Team.

6.2.3.2 PHYSICAL INTEGRATION OF APM FOLLOW–ON PAYLOADS

For the subsequent flights to the APM the payload equipment to be integrated and processed consists mainly of payload samples and payload equipment, as well as consumables and less frequently subrack facilities (Class–2 payloads) and Class–1 payload facilities.

- Class–1 Follow–on Payloads

In principle, the same process as described in paragraph 6.2.3.1 applies; Class–1 payloads will undergo an Interface Verification and System Compatibility Test on the Rack Level Test Facility. For compatibility Class–1 payload verification, the RLTF will simulate the on–orbit payload complement behaviour, if necessary or to the extent required. Either flight identical ground reference models (P/L EMs) or discrete simulators (e.g. PC–based) will represent the individual ISPRs. The simulators have to represent the power, payload bus, LAN and HRD interface and requested services.

Upon successful completion of Class–1 compatibility testing and interface verification, the ”Flight Readiness Review (FRR)” concludes the Class–1 payload acceptance for delivery into its eventual flight environment (on–board APM payload complement).

Subsequently the Class–1 payload will be transported to the launch site for further integration into the Mini Pressurized Logistics Module (MPLM). Class–1 payloads to be integrated into the MPLM/Shuttle have to be at the KSC site at L–5 months.

When on–orbit, physical integration of a Class–1 payload will be followed by a simplified check–out activity. As part of the increment execution activities the Payload Integration Team provides the necessary inputs partially in the areas where the PIT has performed integration tasks, e.g. procedures, resupply/return, stowage, etc.

- Class–2 Follow–on Payloads

Typically Class–2 payloads (subrack facilities) will not be subjected to RLTF interface testing.

Unless major deltas in the interface performance of the corresponding Class–1 payload have been identified in the analytical process or the Class–2 payload level data sets and commands become MDB entries. An interface reverification of that payload, performed with the corresponding Engineering Model or a Ground Reference Model including the new Class–2 payload, has to be conducted with the RLTF configuration.

DaimlerChrysler Aerospace, Bremen – All Rights Reserved – Copyright per DIN 34

Class–1 payloads will be prepared and verified by the PDOTs and subsequently delivered not later than L–5 months to KSC for integration into the MPLM, or to any other launch/cargo integration site for integration into the cargo carrier, as applicable.

The ”Flight Acceptance Review (FAR)” , if the Class–2 P/L has to be interface tested on the RLTF– concludes the Class–2 payload acceptance for delivery into its flight environment (on–board APM payload complement).

On–board physical integration of a Class–2 payload will be followed by a simplified verification activity.

6.2.4 PAYLOAD LOGISTICS

6.2.4.1 PAYLOAD LOGISTICS OVERVIEW

To maintain the operations of APM payloads for a period of 10 to 15 years, a significant and continuous logistic effort will be required. Three phases are foreseen:

- the processing of a payload prior to launch,
- the enabling activities to install, maintain and service payloads on–orbit, and
- the handling of payloads at the end of their on–orbit life times.

The Logistics Support Team (LST) will be responsible for the shipment of the payload to the launch site. On request of the PDOTs, and coordinated by the PIT, the LST receives payload hardware items for transportation to the launch / cargo integration site. Transportation equipment required by the payload is considered to be a deliverable item from the Payload Developer/Sponsor. At the launch site, the payload will be handed over to the launch authorities for installation into the carrier.

Off–line processing of APM launch and follow–on payloads (e.g. specific inspections, calibrations, servicing and tests) which is defined in the payload requirements documentation will be performed by the PDOTs with support of the KSC representatives.

For late and early access items which may require refrigeration, preparation and processing activities to be performed by the PDOTs at the launch site, KSC will provide the necessary capabilities.

The PIT will coordinate the orbiter / logistics carrier payload stowage between the responsible KSC Integrated Product Team and the payload represenatatives.

Support to the launch authorities will be given by the PDOTs and the PIT in case of contingency operations after launch delay or during scrub turnaround for conditioned payload cargo or life limited items.

DaimlerChrysler Aerospace, Bremen – All Rights Reserved – Copyright per DIN 34

6.2.4.2 PAYLOAD LOGISTICS SUPPORTING ACTIVITIES

During the orbital life time of a payload for a number of Space Station increments, the LST will arrange any hardware uploading necessary to maintain experiment operation. This hardware includes items such as new samples, new specimens, servicing tools, servicing materials, resupply fluids, spare parts, exchange hardware for failed components, and new drawers or inserts. For all these items a special acceptance process must be conducted, the packaging must be arranged, and delivery to the launch site must be carried out. The LST will also be responsible for receiving and dispatching of hardware which returns from orbit. This hardware consists mainly of processed samples, specimens and collectors, but also instruments and facilities can be returned in cases where the return is justified by the User.

In order to distinguish between different possible logistics support requirements, categories have been identified:

- short–lead–time cargo requirements at regular intervals, e.g. time critical samples requiring late access before launch, and/or special conditioning during transport, and/or early retrieval after return
- cargo requirements at irregular intervals, e.g. laboratory support equipment
- non returning payload cargo, e.g. consumables.

Logistics engineering and analysis will be performed as a technical support activity to the in–orbit and ground logistics support functions. During payload operations, for example, actual operations data will be reviewed to determine the adequacy of the support, and the results of this review will be taken account of in the future logistics planning.

APM payloads may be designed to operate for several increments. In some cases, this may be extended to the entire lifetime of the Station, through both in–orbit and on–ground maintenance. ESA is responsible for the ground maintenance of its payloads and for supporting the in–orbit maintenance performed by the crew.

Fleet resource management is the process of maintaining reusable fleet resources to support payload operations and ground processing. These include both logistics resupply and return, and User payload items. The payload assets include reuse payload equipment such as ISPRs, Drawer and Stowage Rack hardware as well as the associated ground support equipment.

Payload ground transportation takes inputs from fleet resources, packing, handling, storage and transportation (P, H, S & T) procedures for the specific ground transportation operations

6.3 PAYLOAD OPERATIONS

The Payload Operations task encompasses the preparatory and execution activities required to conduct European payload User and APM payload complement operations.

DaimlerChrysler Aerospace, Bremen – All Rights Reserved – Copyright per DIN 34

The preparatory activities consist of the following types of activities:

- Generation of P/L operations documents and databases
- Generation of contingency procedures
- Development of P/L operations products, and
- P/L training of the ground personnel and flight crew
- Planning.

The execution activities are subdivided into:

- P/L On–Orbit Operations
- PDOT / User Console Operations, and
- P/L Operations Execution Planning.

6.3.1 PAYLOAD OPERATIONS INTEGRATION

The Payload Operations Integration task includes management and in particular the preparatory activities required to perform increment payload operations.

6.3.1.1 PAYLOAD OPERATIONS INTEGRATION MANAGEMENT

The Payload Operations Integration Management function covers the activities performed in support of payload operations preparation.

For the first APM increment there will be extensive preparation activities, which include the preparation of standard payload operations capabilities in terms of methodologies, documentation, hardware, software, trained personnel, and specific operations information for the APM launch payload. For subsequent increments the mission preparation activities will mainly be associated with changes to the existing payload database. This will imply generally small changes to the standard documentation based on payload complement changes, lessons learned and operational experience.

Coordinated by the PAM, the payload operation documents and payload databases for Class–1 and lower level payloads will be developed by each of the operations team which will use these operations products for execution. The data will be initially provided into the Payload Data Sets database via the WWW by the Payload Developers and Operations Teams. This will be reviewed by the PAM, the Payload Integration team, and the APM Engineering Support team. These datasets will then be used as the basis for the generation of final operations products.

6.3.1.2 PAYLOAD OPERATIONS PREPARATION

The Payload Operations Preparation task covers the generation of payload operations documents and databases, the definition of operational rules and constraints, and the development and integration of the various on–board and ground based operation products which are required to execute payload operations.

DaimlerChrysler Aerospace, Bremen – All Rights Reserved – Copyright per DIN 34

6.3.1.2.1 PAYLOAD OPERATIONS DOCUMENTS AND DATABASES

Generic Payload Operations Documents and Databases

In order to support the APM–CC interfaces to the GSOC including the SSCC, POIC, and the FRCs / USOCs generic payload operations documentation will be prepared. These documents will define the responsibilities of the Organizations, the joint operational procedures between the teams and the operational handbook for the Flight Control Team (FCT).

Documents and procedures related to the internal operations of the ESA ground segment will be developed by the OMT, FCT, IGS Control Team, PIT, EST, and the PDOTs. Each operational organization will prepare console handbooks, procedures, other documents, databases and tools necessary to support ground segment operations. Subsequent upgrades of the documents and procedures will be needed based on lessons learned and evolving operation requirements, changes in the ground segment or operational organizations, or for instance for the inclusion of new PDOTs

Specific Class–1 & Class–2 Payload Operations Documents and Databases

Class–1 payload facilities will stay on–orbit for several years with occasional maintenance and upgrades as necessary. Therefore the operational products and databases required for them will be used on a multi–increment basis, with updates on an increment level to cover lessons learned, maintenance and upgrade activities.

Throughout the nominal operations phase the main changes to operational documents and databases on an increment basis will be those associated with Class–2 payloads and samples. These payloads will affect planning and procedure type of information, because they will generally utilize different resource profile or impose changed constraints. Also procedures and stowage information will change.

The operations preparation activities for these Class–2 or sample payloads will be coordinated by the appropriate Class–1 PDOT.

DaimlerChrysler Aerospace, Bremen – All Rights Reserved – Copyright per DIN 34

6.3.1.2.2 OPERATIONAL RULES AND CONSTRAINTS

The Payload Integration Team provides inputs on operations rules & constraints to the OMT for the payloads and the payload complement as derived in the analytical integration processes. Based on the results from APM P/L complement analyses, P/L and P/L complement performance and increment P/L configuration changes, this includes:

- identification of P/L and P/L complement operation conditions and requirements
- definition of payload and payload complement operational constraints to avoid possible operation conflicts within the payload flight configuration and opportunities
- provision of payload inputs for the generation of the APM–STP and the MTL w.r.t. the identified operational constraints
- identification of critical operational payload interface requirements
- implementation and updating the payload and payload complement operational constraints based on the current increment requirements and on the lessons learned
- design of preplanned decisions required when payload off–nominal and contingency situations occur

After review these rules & constraints are forwarded by the OMT for integration into the station level Flight Rules and the Operations Guidelines and Constraints Document.

The PDOTs will provide inputs to the OMT for new rules and constraints resulting from properties of the payload or additions/ modifications of these rules resulting from changes of the payload complement or from past experience.

DaimlerChrysler Aerospace, Bremen – All Rights Reserved – Copyright per DIN 34

6.3.1.2.3 PAYLOAD OPERATIONS PRODUCTS

Operations products may be located and/or used on orbit or on ground, and will be held in electronic (executable software or data files) and/or material (paper documents, decals, CDs, etc.) forms. A master version of all electronic operations products, including products in support of payload operations, will be held within a Mission Data Base (MDB).

On–board Payload Operations Products

On–board payload operations products are subdivided into two categories:

- On–board internal payload products
  (e.g. payload automated procedures, command sequences which are executed with payload provided processors) are implemented by the PDOTs.
  The PDOTs are responsible for development, validation and maintenance of all on–orbit operations products which are internal to their payload or implemented on their private laptops. These products include payload facility/laptop embedded software, display definitions and databases, as well as crew procedures.
- On–board payload products residing in the APM DMS
  (e.g. payload automated procedures, command sequences which are executed in the APM DMS environment, i.e. Laptop/PLCU) are prepared by the Engineering Support Team.

Based on requirements from the PDOTs/Users the products for uplink from the APM–CC to the APM, and for use in the APM–CC are delivered for each increment to the APM–CC as part of a new version of the APM MDB which is under overall management of the Engineering Support function.

On–board Payload Operations Products as part of the MDB are:

- **Payload Operations Data File Products**

  The payload on–board ODF contains all procedures and applicable reference material – primarily in electronic form, though some may be physical (e.g. printed–paper) – needed by the crew to operate the payloads aboard the ISS/APM under nominal and contingency situations.

  A command sequence will be an ODF procedure if the operator needs visibility into the sequence and/or requires step level control over the execution of the sequence. If this is not the case, command sequences will be considered as part of the flight software (Automated Procedures) and will thus be an integral part of the payload design.

  The implementation responsibility for the PODF depends on the implementation. Crew procedures executed by payload embedded processors are implemented by the PDOTs, those executed in the PLCU are implemented by the APM Engineering Support Team and coordinated by the PIT with support from the PDOTs.

DaimlerChrysler Aerospace, Bremen – All Rights Reserved – Copyright per DIN 34

The PDOTs provide inputs to the PIT for those on–orbit operations products which are implemented in the APM systems (e.g. MDB, PLCU). Based on the inputs from the PIT the APM EST will develop the initial set of these products which will be then placed in the APM MDB and provided to the Flight Control Team. Only those elements of the payload ODF which can be executed or displayed by the APM DMS will be stored in the APM MDB.

- **Flight Displays**

Flight displays will be used by the crew to monitor and control the payloads on board APM and the ISS according to the procedures developed for the payload on board ODF.
The EST with support of the FCT will develop/customize flight displays for all operations that will support the execution of APM payload on–board ODF procedures.

- **Software Repository**

The software repository for payload may contain

- Payload Automated Procedures (APs)
- Payload ADA Applications, and
- Master Timeline Activities (Command to P/L).

Payload APs and ADA applications are developed by the APM Engineering Support Team for those payloads whose operations concepts incorporate control by the DMS services. The applications are verified during interface verification by the Payload Integration team using the APM Rack Level Test Facility (RLTF).
The Mastertimeline (MTL) will be developed by the FCT from the STP provided by the OMT planners and inputs from systems and payload personnel. The MTL implementation into the MDB will then be performed by the Engineering Support Team based on the provided inputs. The FCT is responsible for the uplink of files onto the flight system.

- **Command/Data Repositories for the on–board payloads (limited subset)**

The definition of the command/data repositories is made within the APM Mission Data Base (MDB). The data base includes P/L commands, acquisition tables, telemetry packet definitions, calibration tables as well as monitoring tables.

The MDB contains all P/L related commands/data required to support onboard payload operations.

Prior to each increment P/L on–board command & data repositories are developed and verified by the APM Engineering Support team.

Definition of payload TM/TC parameters is only provided where on–board display and/or processing of payload data/commanding via APM DMS is required.

As a minimum the following will be required from all payloads in order to support crew operations:

- Payload data for P/L complement overview displays on system laptop
- Command sequences for controlled payload shutdown.
- Payload safety related data.

DaimlerChrysler Aerospace, Bremen – All Rights Reserved – Copyright per DIN 34

Payload Ground Operations Products

In order to operate and coordinate the operations of payloads from the the FRCs/USOCs and the APM–CC respectively, a number of ground operations products such as on–console handbooks and payload operations coordination procedures need to be developed.

Those used internally to the PDOTs are their own responsibility.

Procedures which define the coordination between the FCT and the PDOTs are developed by the FCT with the support of the PDOTs.

The PDOTs provide the data and procedures to enable the FCT to generate products necessary to provide oversight monitoring and allow contingency control of payloads.

Remotely located PDOTs will receive from the Flight Control Team and the IGS Control Team the necessary information about the voice loop allocations and IP addresses of the APM–CC and IGS domains relevant for the payload operations.

Payload Ground Operations Products as part of the MDB are:

- **Payload Operations Data File Products**

  The payload ground ODF contains all procedures and applicable reference material – primarily in electronic form, though some may be physical (e.g. printed paper) – needed by the ground based operators to operate the payloads aboard the ISS/APM under nominal and contingency situations.

  Payload ground ODF procedures will be non–machine executable text file procedures, and will be used to guide ground based operators through control sequences that will be executed via uplink commands selected from the appropriate command displays. If a machine executable version of the ODF procedures is required, this version will be stored on–board and executed upon ground commanding.

- **Ground Displays**

  Ground displays will be used by the ground operators to monitor and control the payloads on–board APM and the ISS according to the procedures developed for the payload ground ODF.

  The EST with support of the FCT will develop/customize ground displays for all operations that will support the execution of APM payload ground ODF procedures.

DaimlerChrysler Aerospace, Bremen – All Rights Reserved – Copyright per DIN 34

- **P/L Command/Data Repository for the APM–CC (limited subset)**

  The payload command/data repository (similar to the on–board repository) will be used by the FCT for processing the downlink telemetry and generating uplink commands and data files. The payload part consists of selected data/commands, which are relevant to FCT operations.

  - The FCT in general monitors only some key parameters from each payload in order to retain oversight of P/L complement operations and major anomalies.
  - Commanding of payloads by the FCT is in general limited to controlled P/L mode change or shutdown, and sending of hazardous commands.

- **Selected FCT P/L Operations Procedures**

  These procedures to be used by the Flight Control Team for execution of selected payload operations are in general payload controlled mode change, shutdown and payload safety critical procedures.

- **APM–CC P/L Displays**

  In order to support the above P/L procedures the PDOTs provide APM–CC display definitions to the Flight Control Team.

In addition, the FCT generates **Console Handbooks and the Payload Operations Handbook** based on data provided by the PIT, the APM EST, and the PDOTs. Such data may include payload design/operations overviews, payload schematics, power management data, safety data, crew procedures and error message tables. The Payload Operations Handbook will contain the procedures used by the FCT to coordinate payload operations with the FRCs, USOCs, UHB and the Users located at the APM–CC.

6.3.1.3 PAYLOAD REVIEWS

In order to ensure successful completion of the APM/payload complement integration process for each increment ESA will implement the following APM/Payload Reviews:

- Payload Complement Integration Review (PCIR)
- Payload Complement Acceptance Review (PCAR)
- Operations Preparation Validation Review (OPVR)
- Operations Readiness Review (ORR)

<u>Payload Complement Integration Review (PCIR)</u>

confirms the completion of the payload analytical integration incl. Phase 1 & 2 Safety Reviews. The Payload Integration Team will provide the data sets comprising the results of the Individual Payload and the APM/Payload Complement Integration Process.

DaimlerChrysler Aerospace, Bremen – All Rights Reserved – Copyright per DIN 34

Payload Complement Integration Review (PCAR)

will be implemented for the APM launch payload complement. The review will demonstrate the completion of the launch payload complement integration into the APM, and the readiness for transportation to the launch site. It finally confirms the successful close–out of the launch P/L complement level integration and test programme. The PIT will provide/present the results of APM launch payload complement compatibility testing to the Mission Management Team (MMT) for review and acceptance.

Operations Preparations Validation Review (OPVR)

confirms that APM and EA payload flight operations products for the increment are complete, so that training and simulations can begin, and that all ESA cargo is ready for integration. The OPVR results will serve as input to the ISS Increment Operations Review (IOR) and the ISS Ground Operations Review (GOR). The OVPR will include the release of the baselined Mission Data Base, e.g. used for RLTF testing, the input to the Station Phase 3 Integrated Safety Review, and execution planning data.

Operations Readiness Review (ORR)

confirms the readiness of new payload hardware for launch and the readiness of the ground segment for the next increment. Furthermore the review mainly approves the final versions of the products released by the OPVR. The Payload Integration Team provides the required inputs for Class–1 payloads, e.g. the ground processing plan.

The acceptance data packages documenting the status of the payloads PAR/FAR (refer to Section 6.2.1.4) are an integral part of the APM CoFR process and are provided by the PDOTs.

The PDOTs participate in the Integration Reviews.

As a result of the whole review process the MMT will issue towards the ISS boards the Certificate of Flight Readiness (CoFR) in a two stage approach:

CoFR #1 ensures the completion of all activities required to certify, that:

1. All system and payload flight hardware and software meet the applicable specifications

2. All the activities necessary to analytically and physically integrate the cargo items into the cargo carrier have been successfully completed and any necessary test, checkout and servicing activities performed;

3. The safety review process has been successfully completed;

4. All requirements necessary for integration of the carrier/cargo into the transportation system have been developed, documented and implemented;

5. All certification requirements for GSE to support the integration of the cargo carrier into the transportation system have been satisfied;

DaimlerChrysler Aerospace, Bremen – All Rights Reserved – Copyright per DIN 34

6. All integration procedures have been developed and verified;

7. All supporting sites/facilities and personnel are certified and ready to support integration of the carrier into the transportation system.

CoFR #2 ensures completion of all activities required to certify that:

1. All supporting sites, facilities, mission support personnel and flight crew, flight software loads, procedures and flight rules are certified and ready to support the flight and increment;

2. The cargo being uploaded is compatible with the on–orbit configuration with respect to ISS system requirements for physical layout, function, performance and operation;

3. The transportation vehicle will not impact the safety of the ISS during proximity operations, docking/berthing, and mated operations;

4. All open items from previous reviews have been resolved and their resolution documented.

6.3.1.4 PAYLOAD TRAINING

Training is an another essential task within the payload operation preparation process. The overall goal of the training is to result in qualified flight crew and ground team members for operations and control of the payload and adequately meet all nominal and off–nominal operations situations. Specific training for the trainee groups flight crew and ground teams will be performed as well as a combined training for all groups teaching to integrated and joint integrated simulations.

The use of common standards (i.e. curricula, courseware, and certification), tools, and courseware should be implemented to the maximum extent feasible. Training materials, equipment and simulators will be provided by the C/D contractors, engineering support, payload integration and the PDOTs.

<u>Payload Training Facilities</u>

APM payload training will be applied for individual payload facilities and for integrated payload operations. Integrated payload and payload facility level training will be coordinated in Europe by the European Astronaut Centre (EAC) on the ”APM Trainer” and at Facility Responsible Centres (FRCs) on individual payload facilities; whole Station training will be performed at JSC on the Space Station Training Facility (SSTF).

- Integrated Payload Training

  This training for all crew members will be performed on two versions of the ”APM Trainer” to be operated by ESA in Europe and in the United States respectively.

DaimlerChrysler Aerospace, Bremen – All Rights Reserved – Copyright per DIN 34

The ”APM Trainer” in Europe will be the primary facility for system training and payload training on element level. This trainer will be based on the APM Simulation Facility, a software facility of the APM C/D phase and includes realistic simulation of the command and display interfaces to the crew for APM systems, subsystems and European payloads. It provides the crew physical working environment equipped with S/S and payload panels of adequate fidelity and functionality to provide a ”realistic” Man Machine Interface (MMI) and positive responses when using these interfaces. In addition, the trainer shall allow crew, ground support and control teams to learn how to operate the MTL, and nominal and off–nominal payload operations.

A second ”APM Trainer” with lower fidelity payload representation (as required on a case by case basis) will be located in the United States (at JSC) as part of an integrated manned base training facility (SSTF) for whole Station training and APM refresher training.

- Payload Facility Training

Payload facility familiarization/training will be performed by the Crew Operation Team (COT) as much as possible at the EAC with the Training Models (TMs) to minimize crew travel requirements. The PDOTs will support the COT by making TMs and the associated information available to it.

Engineering Models (EMs) of both Class 1 and Class 2 payloads and Science Reference Models (SRMs), located at the FRCs, will be used for more detailed training, for instance on maintenance procedures, etc., which cannot be accomplished on the EAC TMs. EMs and SRMs can be utilized by the COT, if required. Payload dedicated training will be supported by the PDOTs and personnel from payload development sites, UHBs or universities.

The PDOTs, in particular the facility responsible operation teams, will support remotely on–orbit (refresher) training during the increment, if required.

Flight Crew Training

Payload advanced and increment specific crew training has to be performed for the ISS international crew. During increment specific training each crew member will only be trained for payloads to appropriate skill levels those as defined in the multilateral increment training plan.

The training flow generally follows a sequence of courses with interrelationships, and will be performed on different levels:

- training of mission increment specific research topics
- experiment presentation
- payload facility familiarisation
- experiment/payload facility training
- payload training on ISPR level
- payload training on P/L integrated complement level

DaimlerChrysler Aerospace, Bremen – All Rights Reserved – Copyright per DIN 34

At L–6 months the flight crew travel will be restricted such that no travel to Europe is planned. They will be restricted to training either in the US or Russia depending on launch vehicle. This training will primarily include integrated ISS training, simulations and will include some refresher training on ESA payloads if necessary using training materials and simulators provided at JSC.

Ground Personnel Training

Each ESA ground segment operations facility will certify its own mission operators, based upon certification criteria established for the MSM programme.

Each operations team will train and certify its own personnel for the tasks that have been designated for it. In case of a remote located Facility Responsible Centre the same applies for the training and certification of the operators for the centre infrastructure.

The FCT will also train other operations teams on interface activities.

PDOTs located at the APM–CC will receive training classes, material, and certification from the FCT. This training has to ensure the integration of the team into the overall operations and enable them to operate the APM–CC systems.

The PDOTs will further receive training for operations which interface with the APM–CC, POIC, SSCC and the crew from the FCT. They will also receive training from the IGS Control Team on simple operations and maintenance activities of the IGS provided equipment.

The PDOTs will support any integrated simulations held between the ESA facilities as well as the joint integrated simulations involving the operations and/or training facilities and personnel of the other Partners.

The Payload Integration Team will also receive training for APM–CC procedures and participate in simulations, if necessary.

Additionally, the PIT participate in training activities for launch site processing.

6.3.1.5 FRC/USOC/UHB VALIDATION AND END–TO–END TROUBLE SHOOTING

The PDOTs are responsible for the operational validation of the FRC/USOC/UHBs necessary for the payload's operations and the external interfaces. This operational validation will include hardware and software systems, operational performance, and operational procedures.

The PDOTs will then support the ESA OMT independent verification and validation of the overall ground segment by operating the FRC/USOC/UHB facilities for integrated system tests, and supporting the simulation program. These tests will progressively include the various organizations involved in the APM operations including NASA POIC organizations. The PDOTs will participate in these tests and confirm that the ground segment performance satisfies their operational requirements.

DaimlerChrysler Aerospace, Bremen – All Rights Reserved – Copyright per DIN 34

Once the ground segment has been validated, the PDOTs will monitor the FRC/USOC/UHB systems and communications, and in case of anomalies, will participate in the trouble shooting and recovery as well as perform the reconfiguration requests.

6.3.2 PAYLOAD OPERATIONS EXECUTION

6.3.2.1 PAYLOAD OPERATIONS MANAGEMENT

Payload operations execution for the European payloads will be carried out by the PDOTs. Operations of Class 1 payloads in the APM will be coordinated by the FCT in accordance with the STP. The FCT will ensure the availability of the planned services and environment for the payload operations.

The teams operating the Class 1 payloads will coordinate user operations of their payloads. Note that these teams can be located at the APM–CC or at a remote USOC, which then acts as a Facility Responsible Centre (FRC).

Different management configurations are possible and the implementation has to be decided on a case by case basis and will depend on the facility, the user requirements and the associated costs including:

- payload commanding from the APM–CC/FRC only, or
- the experiment commands are routed from the UHBs/USOCs via the FRC, which performs the overall facility operations and supervision, or
- payload operation is coordinated by the FRC and the commanding is performed from different sites:
  - the FRC performs the basic facility operations and supervision and
  - the USOC/UHB performs the commanding of the experiment within that facility.

From an FCT point of view, all APM payload operations will be performed according to the plans and schedules developed before and during the increment. The PDOTs will achieve some degree of flexibility for their payload operations through scheduled payload operations windows characterized by resource envelopes.

A Class 1 payload may implement its own timeline to run in conjunction with the MTL. Users will also be able to issue commands out of a pre–validated command database to their payloads during periods when their experiment is scheduled to run.

Where the Payload Analytical Integration (PAI) process identified a command as hazardous, it may have to be issued by the FCT or SSCC/POIC only.

An ESA science coordinator (a member of the OMT, located at the APM–CC) will be the focal point for the PDOTs for coordination matters, in particular for resolving science operations conflicts between Class 1 payloads.

DaimlerChrysler Aerospace, Bremen – All Rights Reserved – Copyright per DIN 34

Operations Change Requests (OCRs)

Change requests will only be accepted for changes that will be effective in the current operational period. This also includes any ad hoc communications service requests related to real time payload operations.

All operations change requests are to be submitted to the FCT for assessment coordination. Approval of an OCR may result in a changes to the executing timelines on board and on the ground.

Reporting

The PDOTs will provide to the ESA OMT daily and/or weekly performance /assessment reports of the Class 1 payload operations and will issue timely reports concerning any anomalous behaviour of their payloads or any part of the ground segment which may have occurred during their operations.

6.3.2.2 PAYLOAD ON–ORBIT OPERATIONS

Payload on–orbit operations activities cover on–orbit installation, test and verification of new payloads, payload routine operations, servicing and maintenance, and deinstallation for return to ground.

For pressurized payloads, on–orbit installation is accomplished by the crew at the rack or drawer level. The installation involves mating of the various interfaces (screws, latches, hinges, electrical connectors, fluid lines, vacuum lines, etc.). Installation of software is accomplished nominally at module–level only.

Following successful verification, the routine operations of a payload facility can start, under the control of the on–board crew, internal payload automation, the PDOTs/Users on the ground, or a combination of all three. In the APM, the on–board crew can control the payload using the APM portable laptop computer connected to the APM system LAN, or by directly operating switches, displays and computers that form part of the payload itself. Automated procedures can run under the control of payload internal processors, with additional support from the APM Payload Control Unit (PLCU) if required.

6.3.2.2.1 PAYLOAD ROUTINE ON–BOARD OPERATIONS

With regard to the APM payload operations preparation process, in particular the development of the on–board payload operations products this paragraph gives a short overview of payload routine on–board operations.

General Concept

A hierarchical and distributed operations concept has been developed, as shown in figure 6.3.2.2.1–1 with the objective to increase operational flexibility and to limit the level of integration with respect to inter–element operations to an extent mandatory for safe and consistent Station operations.

One of the main tasks of this concept is to provide the required infrastructure for the operation of different payloads under different missions and scenarios (autonomous and interactive operations).

DaimlerChrysler Aerospace, Bremen – All Rights Reserved – Copyright per DIN 34

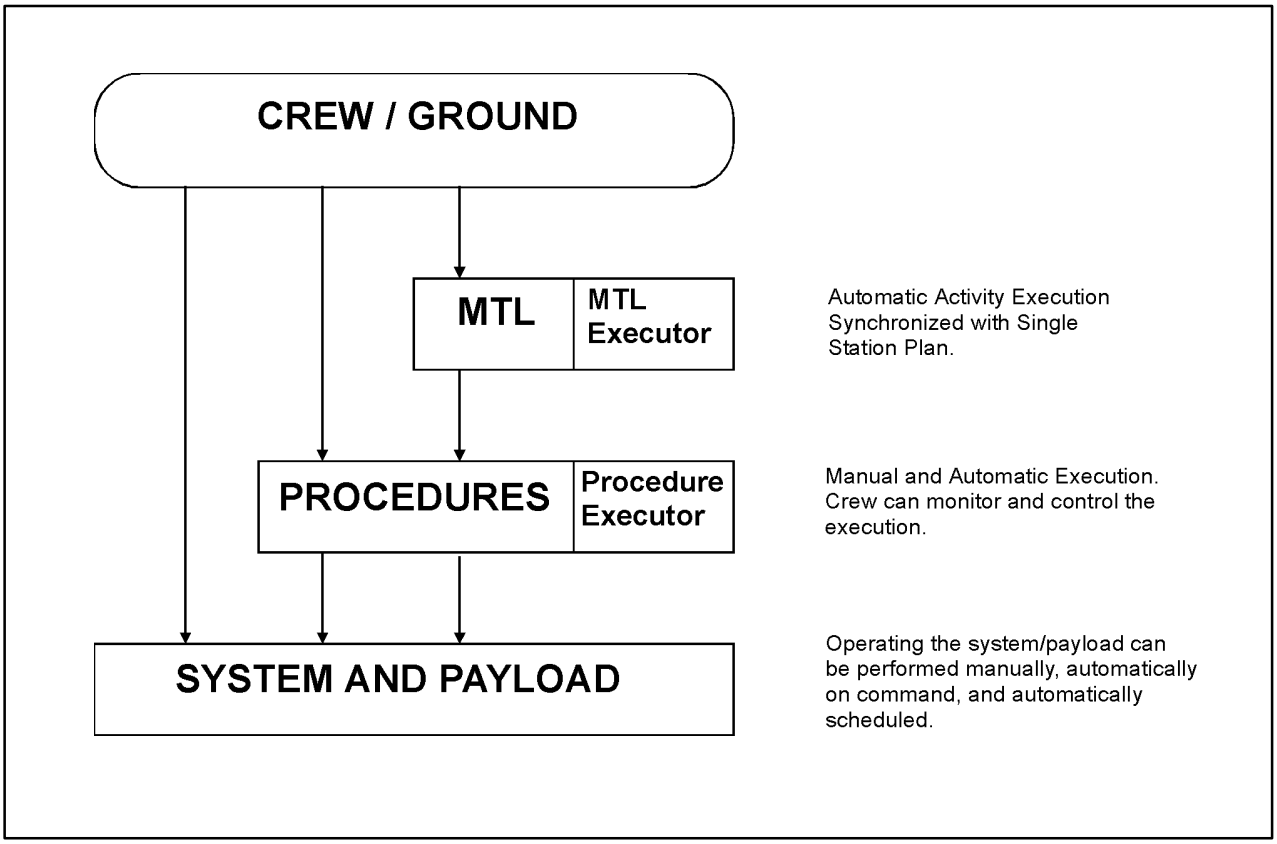

FIGURE 6.3.2.2.1–1 DISTRIBUTED OPERATIONS CONCEPT

P/L Command & Control

For routine operations of the APM payload complement two types of payload control activities can be distinguished:

- centralized control of payload
- local control of payload

Centralized Control of Payload is accomplished through the execution of system procedures and software to prepare for and to support on–line execution of payload operations. The system activities include the provision of resources, set up of required monitoring tables, and to establish the communication paths between on–board processing nodes and/or the ground. These activities will be controlled via the APM Mastertimeline.

DaimlerChrysler Aerospace, Bremen – All Rights Reserved – Copyright per DIN 34

Local Control of Payload is accomplished through the execution of P/L internal processes. The implementation can be one of the following methods defined or a combination of them:

- Automated Payload Operations:
  Internal P/L control processes with no crew support requirement will be controlled by software by the payload internal processor (rack controller).
- Payload control is performed from ground, i.e. USOC/FRC/UHB or APM–CC.
- Manually (Crew) controlled payload:
  P/L command and control will be performed by the crew using ISPR located controls or the payload private Laptop displays. The payload private Laptop is not connected to the APM system LAN.

In all cases the APM system provides the required data transfer capability.

Payload Crew Procedures

The crew conducts their day to day P/L operations using P/L crew procedures. In contrast to past missions, it is intended to utilize P/L crew procedures primarily in electronic formats and provide means for automatic execution. In order to eliminate the crew having to cope with different P/L crew procedure concepts and formats all Automatic Crew Procedures (ACPs) will be implemented by using the Crew Procedure Language (CPL). The CPL scripts are executable on the APM system laptops.

ACPs can be visualized in two types, the Checklist (textual format) and Logic Flow format procedure (data flow diagram).

Paper versions of a selected subset of the P/L ODF will be available on–board to provide critical backups, as well as support certain manual tasks (cue cards), etc.

6.3.2.2.2 PAYLOAD OPERATIONS SUPPORT

Integration/Activation/Check–Out, Reconfiguration and Deactivation

Specialist insight and assessments will be needed in order to support the operations performed during major payload configuration changes.

The PDOTs and the PIT will ensure that engineering and diagnostic expertise are available to the APM operators during those periods in which payload facilities are integrated, activated and checked out, or deactivated and removed.

Anomaly Investigations

PDOTs specialist insight and assessments will be needed in order to fully understand and/or prevent the reoccurrence of any anomalous behaviour or failure of a payload. It may also be required in order to fully recover from such events, especially when involving hazardous or critical functions, and may therefore provide modified or supplemental procedures to be used in place of, or in addition to, the predefined recovery procedures used by the ground based operators and/or the on–board crew.

DaimlerChrysler Aerospace, Bremen – All Rights Reserved – Copyright per DIN 34

Payload Maintenance and Configuration Control

The payload maintenance support includes a change control process for on orbit payload configuration, which evaluates, approves, and tracks all modification to the payload. This applies to both software and hardware modifications. The PDOTs will manage both the physical and operational configuration of their payloads.

Payload Inventories

The PDOTs will track the location of items held within payload facilities. It will also monitor the usage of all its spares and consumable.

Dialogue on European Payloads

The PDOTs will support the FCT and ensure that personnel with specialist knowledge of the European payload's engineering and operational details are available to answer questions from the APM–CC/ POIC.

The PDOTs will ensure that the documentation used to support the APM payload operations is updated to incorporate newly established details of the planned operations (e.g. as a result of the weekly planning, or daily replanning cycles), or modified to reflect any significant changes in them as a result of contingencies, lessons learned, maturing operation knowledge, or changes in the investigator's requirements.

6.3.2.2.3 ON–ORBIT EXTERNAL PAYLOAD CONFIGURATION AND SERVICING BY THE SPDM

The servicing of external payloads by the SPDM is described in section 3.1.11.2.

6.3.2.2.4 PAYLOAD OPERATIONS CONTROL

6.3.2.2.4.1 PAYLOAD OPERATIONS & STATUS MONITORING

APM payload monitoring will be done at different levels:

Payload Operations Teams

The class 1 PDOTs will be prime for monitoring their payloads: they will receive the complete telemetry data sets for their payloads, i.e. payload housekeeping and payload science data. They will ensure that their payload stays within the agreed resource envelope throughout the operations.

During crew payload activities, the PDOTs will monitor the down–link video channels, if applicable, and audio loops and may contact the crew if approved vice the FCT or POIC as appropriate.

Whenever anomalies or faults are detected by this monitoring process, the FCT will be informed by the PDOTs and contingency procedures may be initialized to stabilize or recover from the situation.

DaimlerChrysler Aerospace, Bremen – All Rights Reserved – Copyright per DIN 34

A PDOT for a Class 1 payload may consist of a core payload operations team (i.e. a facility responsible team) and several Class 2 payload operations teams (i.e. investigation teams).

The facility responsible team will have the lead in coordinating the overall Class 1 payload operations with the investigation teams and will supervise the overall operations.

FCT and POIC Supervision

The APM payloads will provide housekeeping data to the APM system for down–linking and on–board display, and some high level status data of the European payloads will be made available to POIC and APM–CC.

Resources consumed by each major APM payload facility will be monitored by the FCT via the rack–level interface so that any major excursions may be detected and dealt with in a timely manner; either by the PDOTs responsible for the payload facility reducing its consumption back to the prescribed level, or the termination of the resource by either the crew or the FCT. As requested by the PDOTs, the FCT will also monitor specific and predefined payload parameters (e.g. if the PDOTs are unable to support round–the–clock monitoring).

In case of changes to payload resources, including those due to system problems, crew unavailability or troubleshooting, the FCT in support to the POIC/SSCC will coordinate the corrective actions with the APM PDOTs . This will be particularly necessary if load shedding is required by the APM, which will involve activating planned load shedding procedures, while coordinating any necessary payload actions with the relevant PDOTs.

Archiving

Payload health & status data will be processed and archived by the ground segment facilities in order to aid the payload users in their processing and interpretation of the downlinked data.

The PDOT will be expected to provide the archive for the science data channels and the complete payload telemetry data stream

Request for playback using operational communications lines will be made by the PDOTs through the FCT by change requests. Playback data can cover both health & status data and telemetry recorded on board by the ISS during LOS periods, and replayed at a later point in time.

DaimlerChrysler Aerospace, Bremen – All Rights Reserved – Copyright per DIN 34

6.3.2.2.4.2 PAYLOAD COMMANDING & FILE GENERATION

Payload Operations Teams

Payload commanding may be performed either with direct ”ad hoc” commands from the PDOTs, FCT or crew, or with pre–planned commands which were uploaded and result in MTL entries or payload internal timeline execution. Payload commanding by the FCT or crew is coordinated with the responsible PDOT wherever possible. The FCT or crew can issue payload commands in response to contingencies or anomalies according to pre–defined procedures.

The ”ad hoc” commands will be mainly related to interactive experiment operations (”telescience”) or trouble shooting and fault recovery.

Another way of payload commanding is a strong investigator/crew interaction. For those payloads which require crew support during the operations, the PDOTs will be in direct voice/video contact with the crew. The PDOTs will advise the crew which action to take on the voice loop.

The PDOTs will decide on the appropriate way for commanding and will have requested their command requirements as part of their STP inputs.

The PDOT will be responsible for issuing authorized commands to their payloads during predefined periods, or ”operational windows”.

Direct payload commands from remote located PDOTs will be checked in the IGS against the scheduled operations command path window. The command path may further be enabled/disabled by the FCT.

Command data files for payload internal timelines generated and validated by the PDOTs will be uploaded during their operations windows.

There may be payloads commands which were considered in the PAI process to be hazardous or safety critical. These commands will be approved and issued by the FCT, POIC or SSCC on request from the PDOTs.

For commands received by payloads, an acknowledgement of its receipt will be sent to ground and forwarded to the sender. The PDOTs will then have to monitor and verify that the commands have been both executed and have produced the desired results.

Payload Anomalies/Contingencies

If a PDOT is unable to control its payload within the assigned resources or stabilize it into a desired mode the FCT will issue appropriate commands for contingency control and/or shut–down of the APM payload facilitiy as identified by the PAI activities, and/or as requested by the user.

6.3.2.3 PAYLOAD OPERATIONS EXECUTION PLANNING

Columbus schedules are associated with a specific set of execution planning products, in particular the Columbus On–orbit Operations Summary (C–OOS) and the Columbus Short Term Plan (C–STP).

DaimlerChrysler Aerospace, Bremen – All Rights Reserved – Copyright per DIN 34

The C–OOS and C–STP are the APM specific equivalents and the ESA OMT inputs of the ISS On–orbit Operations Summary (ISS–OOS) and the ISS Short Term Plan (ISS–STP), which are both generated by a multilateral planning team, the Integrated Execute Planning Team (IEPT) for the ISS as a whole.

For the Station, the ESA OMT will coordinate all European system and payload planning for those payloads/systems executed in the APM. Based on their allocations of resources in the On–orbit Operations Summary (OOS), the PDOTs and the EST will perform their own planning to produce detailed schedules of all operations to be performed, and all crew and command activities. The ESA OMT will integrate these schedules, and ensure that all constraints are met and then to generate a coordinated schedule input in the form of an ”Columbus Short Term Plan” (C–STP).

Pre–Increment Planning and C–OOS Development

The OOS input (C–OOS) for the ISS will be generated by the ESA OMT based upon the resource requests and associated scheduling preferences expressed by the PDOTs.

Details with respect to the operational requirements and constraints of the ESA payload facilities –which will dictate their resource requests characteristics – will be developed by the PDOTs. This will represent the consolidated input with respect to all user payloads within each facility, plus activities to implement the facility’s predefined preventive maintenance schedule and any updates to it as a result of operational experience and/or any design modifications which prove to be necessary. The data will define the Class–2 payload name, duration and resources required to perform the activity, number of performances required and if appropriate, preferred scheduling windows.

Depending on the resource envelopes finally distributed by the IEPT, the PDOTs will negotiate with the ESA OMT modifications as necessary.

Once finalized, the OOS will be used by the ESA OMT to develop the associated Short Term Plans.

During the ongoing increment execution, the OOS maintenance process allows the PDOTs to issue change requests to the OOS for the upcoming weeks within the current planning cycle.

6.3.2.3.1 APM SHORT TERM PLAN DEVELOPMENT

The Columbus Short Term Plan (C–STP) is the timetable defining when the APM system and European payload facility operations will occur, and their level of allowed resources. The C–STP will cover a period of one week and will be developed in an iterating manner by the ESA OMT, based upon the resource requests and scheduling preferences of the systems and payloads which will operate during this period.

DaimlerChrysler Aerospace, Bremen – All Rights Reserved – Copyright per DIN 34

The Columbus Short Term Plan therefore forms the basis onp which all of the time related operations products will be developed, which in particular includes the Columbus Master Timeline (MTL). The MTL is a machine executable timetable by which activities are ultimately scheduled and synchronized with those of the Station as a whole. A–STP consists of an executable part for automatic system and payload operations, and a man machine interface (MMI) which provides the crew via commercial laptops with the complete picture of the scheduled manned and automated operations. The MTL is coherent with the timeline portion of the On–board Short Term Plan (OSTP), which is the equivalent schedule for the whole Station. The Columbus on–board Master Timeline, which will be edited and uplinked in segments by the APM–CC FCT and is nominally generated every 24 hours and to cover the next 24 hour period of operations.

The PDOTs, located at various nationally developed USOCs/FRCs, will coordinate with the ESA OMT resource envelopes needed for their planned payload operations, and provide to the ESA OMT (in compliance with the resource envelopes) any other payload operations characteristics and command load requirements in order to maintain coherent resource allocations between their own facility and the others within the APM.

A pre–coordination of multiple experiments within a class 1 payload facility will be made by each PDOT. Inputs for US experiments within a European multi–user payload facility will be pre–coordinated by the appropriate PDOT, in direct cooperation with the US users.

Where applicable, the PDOTs will generate payload facility internal timelines which have to be synchronously executed in parallel to the Station and Columbus timelines (STP and MTL).

STP Review

The PDOTs will review the draft STP and provide inputs to it. The ESA OMT will collect and coordinate all European STP replanning requests, and will accept or reject them on the basis of their impact on the STP. Such decisions may be taken after consultation with the PDOTs.

The PDOTs will be notified whenever the process results in modifications to the services provided to the payloads.

MTL inputs

In addition to the timeline inputs for each resource request, the PDOTs also have to provide any additional information that would be needed during the execution of the on–board STP and MTL and typically include the names/IDs of the on–board procedures to be called from the timelines, specific information for the crew, etc.

Communications Services

Payload operations related communications service requirements will be part of the PDOTs input to the OOS and STP generation process. However, additional service requests, which are not related to real time payload operations – such as video conferences and file transfers between teams – have to be submitted separately to the IGS Control Team for network planning coordination.

DaimlerChrysler Aerospace, Bremen – All Rights Reserved – Copyright per DIN 34

Weekly Payload Operations Planning

The User tasks related to APM weekly payload operations planning activities are as follows:

- Finalize the requirements preparation for resources needed for payload operations
- Generate the resource requests and specify any scheduling preferences for payload operations activities, and from which the ESA OMT/POIC will be able to generate the initial P/L portion of the C–STP/ISS–STP
- Generate and schedule initial payload operation timelines within the boundaries imposed by the assigned time resource envelopes of the initial C–STP or ISS–STP
- Support the ESA OMT for resolving conflicts between the initial C–STP and the overall Station wide P/L resource assignment
- Review the finally adjusted A–STP (or the Station Short Term Plan in case of Non APM European Users) to impact any change from the initial C–STP
- Update the initial payload operation timelines, if necessary, to reflect the actual resource allocations contained in the C–STP
- Issue Replanning Requests (RR), if necessary, to request a change to the resource envelopes assigned
- Notify the ESA OMT of any C–OOS activities, which could not be scheduled within the C–STP in order to allow them to be reallocated to a later period.
- Supply P/L planning inputs to the ESA OMT for C–OOS maintenance.

6.3.2.4 PAYLOAD OPERATIONS EXECUTION EVALUATION

Throughout the increment's execution, the on–line facilities will generate summary reports and will forward these to the ESA OMT, in order to provide them with timely assessments of the activities performed.

The PDOTs will provide the OMT the summary of their actual executed payload facility operations for the Post Increment Evaluation Report (PIER). Deviations from the OOS and STP planned performances will be highlighted and reference made to the causes of the deviations, if applicable.

Such details may be provided or referred to as inputs into the planning and preparation activities of subsequent increments, for operations which could not be performed during the last increment, or which need to be repeated, and therefore be incorporated into a later increment.

In addition, each facility operations team will be responsible for ensuring that any "lessons learned" are consolidated including into the appropriate ground segment handbooks, manuals or other documentation, as well as the relevant flight segment software or tables (for systems and/or payloads), and crew procedures.

DaimlerChrysler Aerospace, Bremen – All Rights Reserved – Copyright per DIN 34

7 GROUND SUPPORT EQUIPMENT

Portions of the APM GSE are designed to support the checkout, integration and subsequent pre–flight checkout of payloads included in the initial launch of the APM and of follow–on payloads. Any necessary initial payload–dedicated GSE provisions are the responsibility of the payload.

In general GSE shall comply with National Safety Regulations. Payload GSE to be used at the launch site shall comply with the requirements specified in the Payload Ground Safety Handbook, ref. document 2.2.12.

7.1 MECHANICAL GROUND SUPPORT EQUIPMENT (for APM launch payloads)

Mechanical Ground Support Equipment (MGSE) comprises equipment necessary to allow the

- lifting of payload racks including integrated payload
- installation of payload racks into the APM.

The design of the MGSE is such that no detrimental loads from the ground environment or the MGSE will be introduced into the payload flight hardware. The MGSE ensures that ground loads do not exceed the flight design loads, by use of appropriate attenuation devices.

7.1.1 RACK HANDLING CAGE

The payload rack handling cage is shown in Figure 7.1.1–2, Rack Handling cage. The rack will be attached to the rack handling cage at the attachment points A, B, C, and D as shown in figure 7.1.1–1. This device supports the payload activities during ground processing.

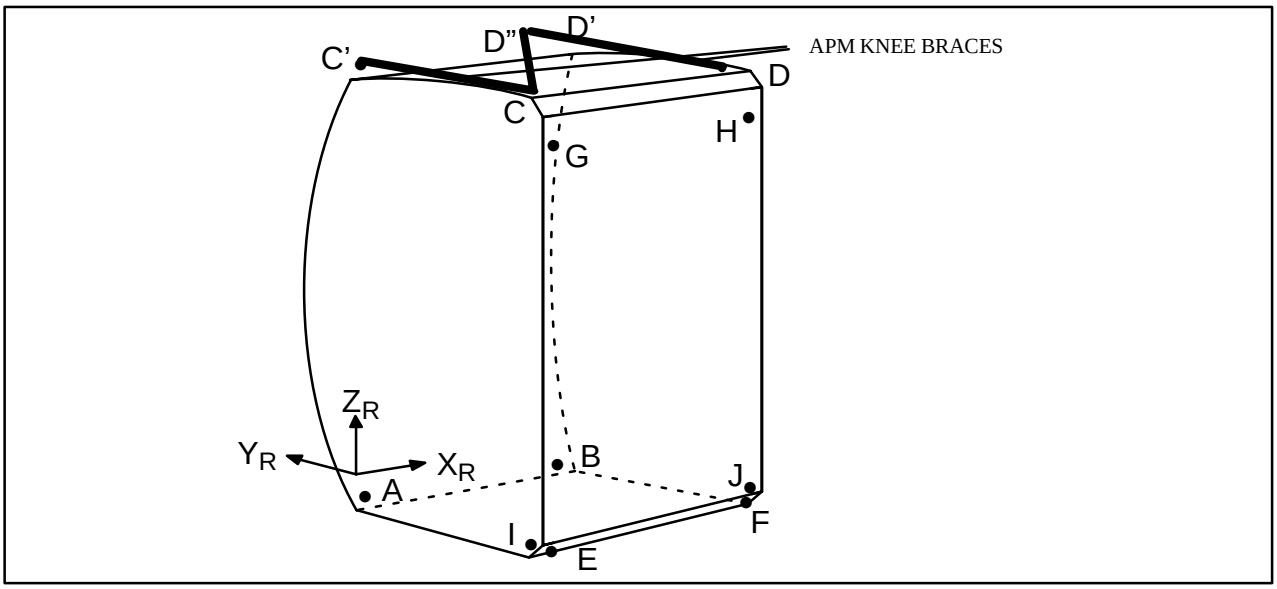

FIGURE 7.1.1–1 RACK ATTACHMENT POINTS

DaimlerChrysler Aerospace, Bremen – All Rights Reserved – Copyright per DIN 34

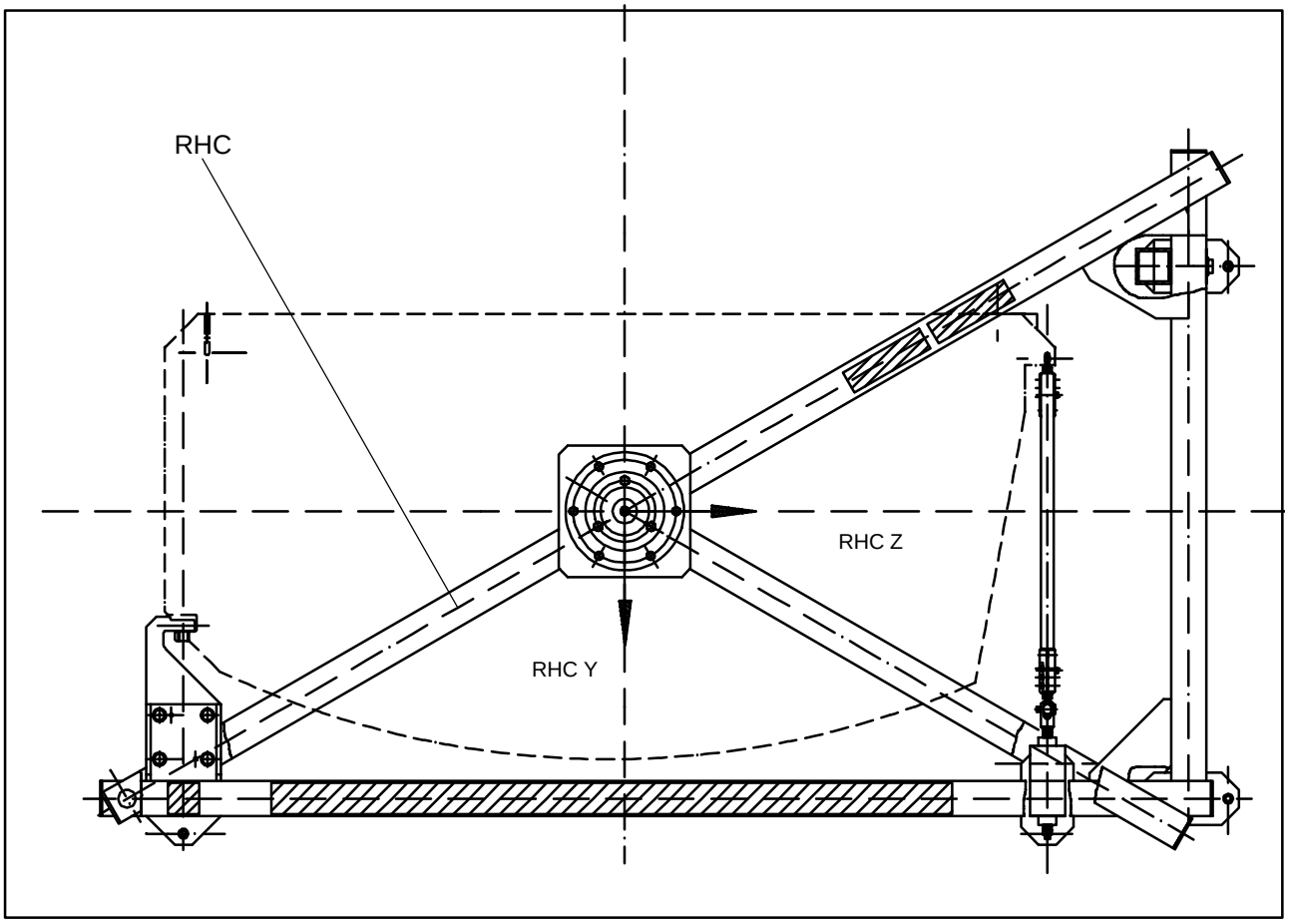

FIGURE 7.1.1–2 PAYLOAD RACK HOISTING DEVICE

7.1.2 RACK HANDLING FRAME

Payload racks can be installed into the final APM location with the rack handling frame as shown in figure 7.1.2–1. The rack interface with the rach handling frame at the rack attachment points E, F, G, and H as shown in figure 7.1.1–1.

DaimlerChrysler Aerospace, Bremen – All Rights Reserved – Copyright per DIN 34

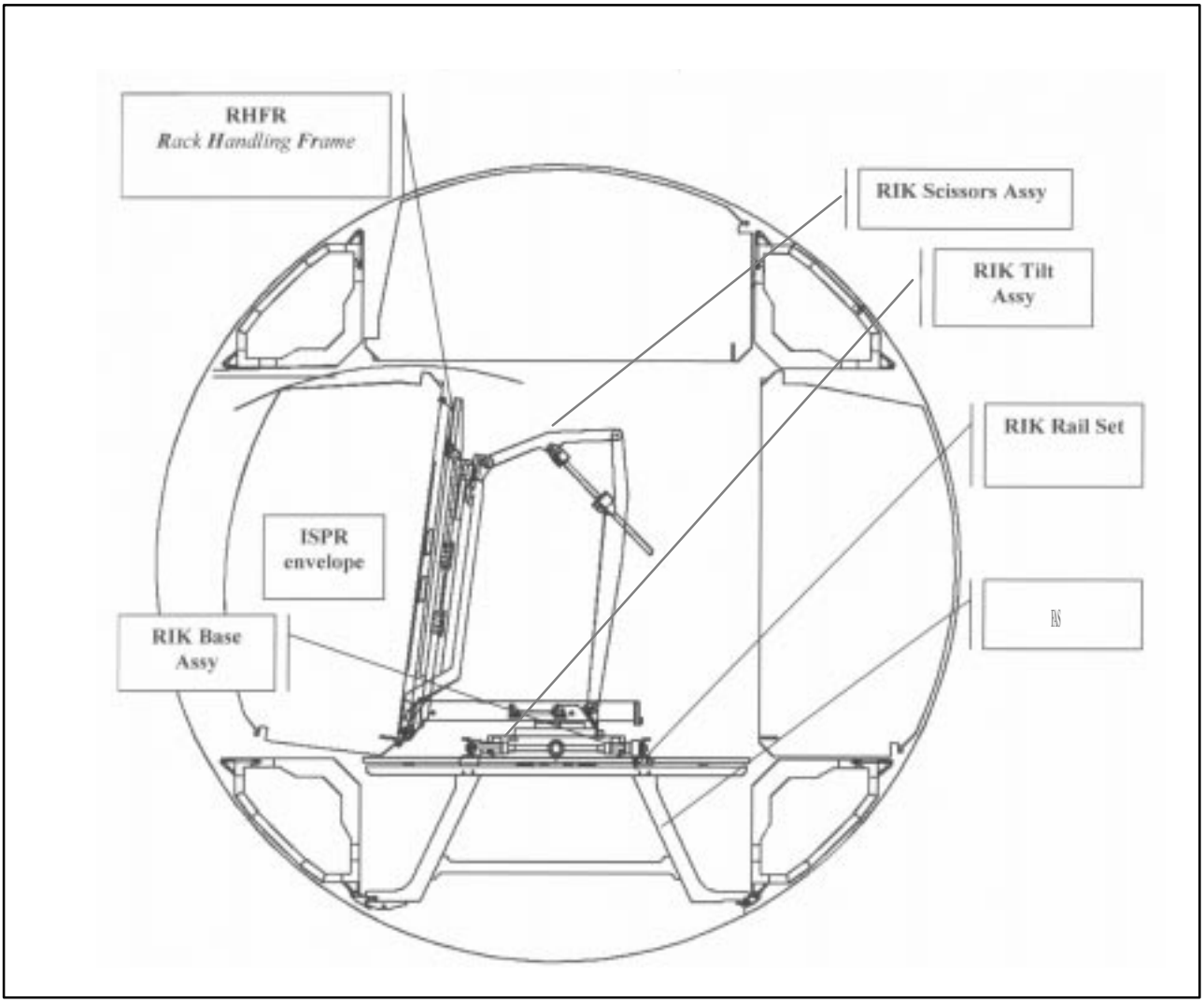

FIGURE 7.1.2–1 RACK HANDLING FRAME

7.1.3 MGSE TO SUPPORT EXTERNAL PAYLOADS

TBD

7.2 ELECTRICAL GROUND SUPPORT EQUIPMENT

7.2.1 APM EGSE

The APM EGSE is an automatic checkout system to support AIT activities in Bremen with the APM Flight Configuration Electrical Test Model (ETM) and Proto–Flight Model (PFM).

DaimlerChrysler Aerospace, Bremen – All Rights Reserved – Copyright per DIN 34

The EGSE is designed to support the following AIT activities:

- integration and checkout of the APM,
- hardware/software compatibility qualification,
- equipment interfaces and performance verification on system level,
- generic payload interfaces verification,
- verification of external flight interfaces (i.e. to the SSMB),
- verification of external ground interfaces (i.e. to the ground segment),
- localisation of equipment faults,
- troubleshooting of flight software.

The APM EGSE will be upgraded to support the following additional tasks prior to launch, after the completion of APM AIT program:

- payload integration into the APM,
- integration of payload ground models into the APM Electrical Test Model (ETM) when this will be necessary to support on–board operations.
- payload interface test on rack level with the RLTF

The APM EGSE has software interfaces with the Software Design and Development Facility (SDDF) which is used for design, coding, integration and test of on–board software and mission data.

The APM EGSE supports test data preparation, test data evaluation and test results documentation, as well as test execution. The APM EGSE imports configuration data, automated procedures and on–board software and data units from a Software Design and Development Facility Configuration Management (SDDF/CM) database and exports test result data and intermediately changed configuration data to the SDDF/CM–database, where these are centrally maintained under configuration control.

DaimlerChrysler Aerospace, Bremen – All Rights Reserved – Copyright per DIN 34

The APM EGSE supports both the APM ETM and the APM PFM. The major software components of the APM EGSE are the following:

- Columbus Ground System (CGS) Software
  CGS exists in several configurations each dedicated to a specific operational environment or user task. One specific configuration of CGS provides many of the basic functions of the EGSE.
- Front End Interface Software (FEIS)
  The FEIS provides the interfaces between the FEE and the CGS test nodes. It consists of several Special Application Software (SAS) programs, written in Ada.
- Front End Specific Software (FSS)
  The FSS programs provide specific front–end processing functions and are written in ‘C’ or another commercial language.
- EGSE System Software (ESS)
  The ESS provides EGSE configuration data (i.e. Mission Data Base end–item definitions), the EGSE User Control Language (UCL) library and EGSE status synoptic display definitions. It also provides the EGSE self–test and health status software and activation and de–activation Automated Procedures (AP).

The major hardware assemblies of the EGSE are the following:

- Coordination and Display Equipment (CDE)
  The CDE is the CGS platform. It manages the EGSE, executes automated procedures, processes telemetry and measurement data and provides the interface to the operators for test control and results display.
  The CDE provides monitoring and logging of checkout data mainly using CGS software provided services running on CGS test nodes, the Data Base Server and workstations.
- Data Interface Front–end Assembly (DIFA)
  The DIFA provides direct connections to the on–board Local Area Network (LAN) and all MIL–Busses for command and monitoring of the flight system, simulation of the SSMB interfaces and simulation of the functions of missing APM items.
  The MIL–Bus Interfaces of the DIFA simulate the SSMB Command and Control (C & C) bus controllers. They can represent the Power Distribution Unit (PDU) and Heater Control Unit (HCU) remote terminals on the vital bus. They can represent the Command and Measurement Units (CMU) and other users on the system bus and enable simulated payload data to be injected onto the payload bus.
  A LAN interface enables the DIFA to acquire or simulate system data normally passing via the High Rate Multiplexer (HRM) and to monitor local traffic on the LAN. It also supports direct loading and dumping of the Mass Memory Unit (MMU).
  The DIFA provides the telemetry handler by which all on–board local and downlink data acquired by the EGSE is routed to a predefined CGS test node as Consultative Committee for Space Data Systems (CCSDS) packets.
  The DIFA constructs an uplink data stream from CCSDS telecommand packets received from the test nodes and converts the CCSDS data into MIL–bus format as supported by the interface board driver software.

DaimlerChrysler Aerospace, Bremen – All Rights Reserved – Copyright per DIN 34

- Utility Interface Front–End Assembly (UIFA)
  The UIFA provides modules to directly simulate and monitor CMU/VTC/equipment input/output interfaces. The UIFA includes power supplies simulating the SSMB feeders, and dummy electrical loads. It also supports remote control of the SSMB Simulator, Payload Simulator, Thermal Control System (TCS) and Fluidic Ground Support Equipment (FGSE) from the EGSE.
- High–rate and Video Assembly (HRVA)
  The HRVA comprises a High–rate Demultiplexer (HRD) and interfaces with the Video/Data Processing Unit Test Equipment (VDPU–TE), payload test equipment and the DIFA.
  The HRD decommutates the high rate downlink composite data stream into the individual virtual channels. System telemetry is passed to the CGS test node computers, via the DIFA. Payload data is passed to payload test equipment and video is passed to the VDPU–TE and/or payload test equipment. The HRD provides simulated medium–rate data to the on–board multiplexer, and performs bit error rate measurements on the data returned via the telemetry decommutator.
- Ancillary Services Equipment (ASE)
  The ASE provides support services not directly involved in the testing of the APM ETM or APM PFM. It comprises a mobile set of general purpose test equipment for trouble–shooting and maintenance, distribution of main power to the EGSE racks, operator intercom, and commercial, carry–on equipment to detect and annunciate fire in the APM module.

An EGSE Block Diagram is shown in Figure 7.2.1–1 .

7.2.2 INTERFACE PROVISIONS/ REQUIREMENTS FOR P/L EGSE

The EGSE *per se* does not include the complete functionality to check–out the initial payload during ETM/ RTLF testing or an integrated system test, but provides interface capabilities to permit augmentation by payload EGSE for this purpose.

7.2.2.1 APM C/D BASELINE CONFIGURATION

The EGSE is designed to accommodate compatible payload EGSE, which is able to manage and execute payload provided software conforming to the CGS definitions for user software (i.e. Special Application Software, Automated Procedures written in UCL and display definitions).

The EGSE FDDI LAN accommodates at least five interfaces for payload provided computers or front end equipment (FEE).

However the EGSE makes no provision to inter–operate with or supply low rate telemetry to payload EGSE which does not provide an interface to the EGSE FDDI LAN or does not support CGS.

The resources provided by the EGSE for acquisition and processing of system and payload data, in excess of those needed for APM system control and supervision, are available to the payload integration team for use in support of payload integration and checkout.

It is considered that the payload will provide supplementary CGS test node computers and HCI workstations to attain the required capacity for payload data processing.

DaimlerChrysler Aerospace, Bremen – All Rights Reserved – Copyright per DIN 34

Payload telemetry and telecommands will be routed as following within the APM EGSE:

1. Payload Health & Status (H&S) which are acquired by the PLCU via the RT protocol, will be considered after acquisition as system data. They will be therefore submitted by the DMS telemetry service via the C&C Bus to the DIFA (S–Band link). The DIFA makes these telemetry packets available for acquisition by a system test node computer.

2. Payload housekeeping and science data (low rate telemetry) which are acquired by the PLCU via the RT protocol will be considered as payload private data. They will therefore be submitted by the DMS telemetry service to the HRM (Ku–Band link). The data will be transmitted from the HRM to the HRVA which makes the data for acquisition available for a payload test node computer.

3. Payload housekeeping and science data is transmitted by the payload via the LAN interface as CCSDS packets to the MMU (medium rate telemetry), and will be considered as payload private data. The APM DMS routes the data from the MMU to the HRM (Ku–Band). The data will be transmitted from the HRM to the HRVA which makes the data avaiable for acquisition by a payload test node computer.

4. Payload bitstream data which is transmitted via the payload TAXI interface to the VDPU will be considered as payload private data. The data will be transmitted to the HRM, and from there to the HRVA. The HRVA provides 12 hardware lines to which the payload test equipments may be connected. The payload test equipment will receive the same bitstream data as provided by the payloads to the VDPU.

5. Payload RT protocol commands to be transmitted to a payload RT will be embedded by a system test node computer in CCSDS packets. The system test node will transmit the packets to the DIFA (note: RT protocol command initiation is APM–CC responsibility). The commands will be transmitted by the DIFA via the C&C Bus (S–Band link) and the MMC to the PLCU. The DMS telecommand executor will remove the CCSDS trailer and will issue the RT protocol on the payload MIL Bus. (note: all commands via the C&C buses must be in CCSDS packet format)

6. Payload CCSDS embedded commands to the payload LAN interface will be transmitted by a system test node computer in case they are required to be initiated by the system (APM–CC), e.g. payload rack controller resource commands like file transfer control, LAN rate control, etc. These commands will be transmitted to the DIFA which transfers the commands via the C&C Bus to the MMC. The MMC routes the CCSDS embedded commands to the payload LAN interface.

7. Payload CCSDS embedded commands to the payload LAN interface will be transmitted by a payload test node computer in case they are required to be initiated by the payload support and operations centre (USOC)/payload EGSE. The commands will be transmitted in the same way as the commands initiated by a system test node described before.

DaimlerChrysler Aerospace, Bremen – All Rights Reserved – Copyright per DIN 34

7.2.2.2 EGSE CONFIGURATION WITH PROTOCOL CONVERTER BOX

A protocol converter box (which is not part of the APM C/D contract) will be connected on one side with the APM EGSE FDDI LAN via the FEECP protocol, and on the other side with the payload user EGSE via the DASS protocol. With this concept no payload test node computer will be necessary and the payload telemetry and telecommands will be routed as following within the APM EGSE:

1. Payload Health & Status (H&S) will be transmitted as described above (in section 7.2.2.1) under bullet 1.

2. Payload housekeeping and science data from the payload MIL Bus will be transmitted as described above under bullet 2 to the HRVA. The protocol converter box will then request these packets from the HRVA, and will transmit the data to the USOC/payload EGSE.

3. Payload housekeeping and science data from the payload LAN interface will be transmitted as described above under bullet 3 to the HRVA. The protocol converter box will then request these packets from the HRVA, and will transmit the data to the USOC/payload EGSE.

4. Payload bitstream data will be transmitted as described above under bullet 4.

5. Payload RT protocol commands embedded in CCSDS packets to the PLCU which initiates the payload RT protocol command will be transmitted as described above under bullet 5.

6. Payload CCSDS embedded commands to the payload LAN interface required to be initiated by the system (APM–CC) will be transmitted as described above under bullet 6.

7. Payload CCSDS embedded commands to the payload LAN interface, required to be initiated by the payload support and operations centre (USOC)/payload EGSE, will be transmitted from the payload EGSE to the protocol converter box. The protocol converter box will send the commands to the DIFA, which will further route the commands as described above under bullet 6.

DaimlerChrysler Aerospace, Bremen – All Rights Reserved – Copyright per DIN 34

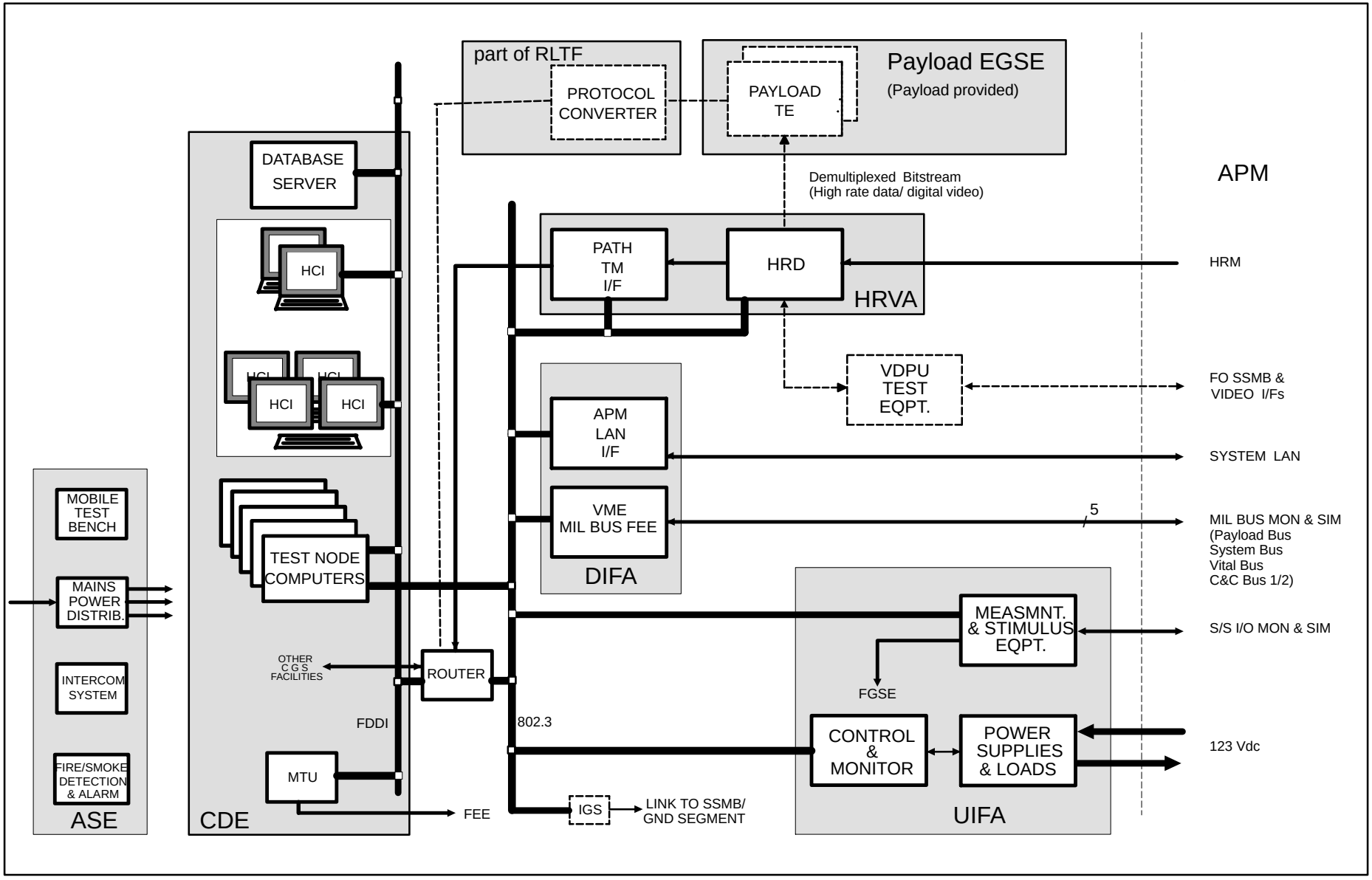

FIGURE 7.2.1–1 APM EGSE BLOCK DIAGRAM

DaimlerChrysler Aerospace, Bremen – All Rights Reserved – Copyright per DIN 34

7.3 SOFTWARE DESIGN AND DEVELOPMENT FACILITY

The APM Software Design and Development Facility (SDDF) provides an integrated facility for design, development and test of APM Flight Software and Data products. The following functions are included:

- Software development for software to be run on a PLCU or on an APM system laptop
- Mission preparation covering preparation and configuration of flight software, on– board common data pool and further portions of the Mission Data Base (MDB), according to specific mission, or system level assembly, integration and verification AIV needs
- Administration and control functions.

The SDDF can support payload software development and integration of payload software to be run on the PLCU or on the APM system laptop as part of the payload integration task. It provides the tools for integration, testing and debugging of programs, data tables and automated procedures. The software codes of available DMS services are made available for integration and test with the rest of payload software.

The SDDF supports the following major APM development activities:

- Design and development of Flight SW entities comprising:
  - Flight Application SW i.e. Payload Flight Automated Procedures (FLAPs) and their respective configuration tables.
  - DMS Software (i.e. Payload Ada applications and associated configuration tables)
  - System/Subsystem HW/SW Configuration Data Tables
- Unit and Integration testing at product/Equipment level
- Preparation of various Mission / AIV–Test configurations, including the generation of the On–board Database.
- Development and maintenance of simulation models of the APM flight equipment.
- Delivery of Flight SW entities to the Configuration Management for subsequent distribution to SITE and EGSE facility.
- Prime System engineering activities, including Master Measurement and Command List, SW specification/SW system, design etc
- Operations engineering at system level
- Test results evaluation activities at system level

The major component of the SDDF is a configuration of the Columbus Ground System (CGS) which provides the basic infrastructure and a large proportion of the functionality. Additional SW development and management tools are added to the CGS configuration.

The SDDF host platform is the HW/SW environment in which SDDF provided tools (SW development and mission preparation tools) will operate. The SDDF host platform is the standard CGS infrastructure development platform consisting of a Sun4/ SPARC workstations plus HP servers running on the CGS infrastructure provided platform services.

DaimlerChrysler Aerospace, Bremen – All Rights Reserved – Copyright per DIN 34

7.4 SOFTWARE INTEGRATION AND TEST ENVIRONMENT

The Software Integration and Test Environment (SITE) provides functions for the integration and test of the APM Flight S/W (i.e. nominal DMS S/W and APM application S/W) and Flight Data on the SITE DMS H/W.

The SITE supports the users for:

- Integration of Flight Application S/W and Configuration Data Items (CDIs) on top of DMS S/W (i.e. DMS S/W without VTC S/W and CMUs),
- Pre–Qualification of Flight Software (such as COAP, LAPAP, Flight APs, Flight Synoptics, Crew Procedures on top of DMS S/W) prior to integration on flight H/W,
- End–to–end data communication verification between APM applications,
- MDB data verification to the extent performed during the normal integration and test operations,
- Onboard software and data generation (SDDF provided functions) verification,
- Onboard software and data generation flow (SDDF/SITE provided functions) verification,
- Simulation Model development and maintenance.

The SITE S/W components (SSA, SEA) are based on CGS provided functions and services for test preparation, test setup, test execution control and observation, and test evaluation. Generally interfaces to CGS are considered as being internal to the SITE components.

As shown in figure 7.4–1 the SITE is essentially composed of the following components:

- SITE Simulation Assembly (SSA) with the Simulation Node (SN), the SN Front End Equipment (FEE) and the Operating System forming the SSA Platform for SSA dedicated components of CGS, SSA specific Front End S/W *(also called CMAS)*, SSA Specific S/W (Startup/Shutdown scripts, specific application S/W for Packet and File handling), and SSA provided resources for the execution of an APM Simulation Model (SIMM).
- SITE EGSE Assembly (SEA) with the Test Node (TN), the TN Front End Equipment (FEE) and the Operating System forming the H/W platform for dedicated components of CGS, specific EGSE S/W and Front End S/W. Essentially SEA is composed of EGSE components with an additional SITE specific MMU Serial Link interface.
- SITE Operational Platform (SOP) with workstations and server forming the H/W platform for dedicated components of CGS providing user interfaces and resources for the Mission Data Base (MDB) and Test Result Data Base (TRDB).
- SITE DMS Hardware (SDH) with DMS representative Onboard LAN incl. HUB, commercial processors for DMC, MMC, PLCU and MMU, laptops and corresponding interfaces to MIL Buses and Onboard and Ground LANs for the APM Flight Software and data as UUT.
  (Note: No platform is provided for VTCs, CMUs, the HRM and the Spare SPC.)

DaimlerChrysler Aerospace, Bremen – All Rights Reserved – Copyright per DIN 34

- MIL Bus Analyser for transmission of VTC commands and monitoring DMS status during the DMS activation and configuration phase when the VTC is acting as Bus Controller (BC) on the System Bus.
- Specific SITE S/W (e.g. scripts, command sequences) for automated SITE startup/shutdown and SITE selftest.

The above mentioned SITE components are developed/procured by different contractors and integrated, tested and qualified under Prime control using a SITE Qualification Simulation Model (Qual. SIMM), DMS S/W, test stubs (test FLAPs, command sequences, etc.) and test data.

The SITE provides an APM Simulation Model (APM SIMM) simulating the functionality and performance of APM Subsystems connected to the System Bus via Remote Terminals (RT) to the extent required for Flight S/W and Data integration and test.

SIMM development (SIMM design and coding, generation of SIMM executable and SIMM development testing to the extent possible without DMS and Simulation Node FE) is performed also on a SITE external SIMM Development Environment (SIMM DE) based on SDDF.

DaimlerChrysler Aerospace, Bremen – All Rights Reserved – Copyright per DIN 34

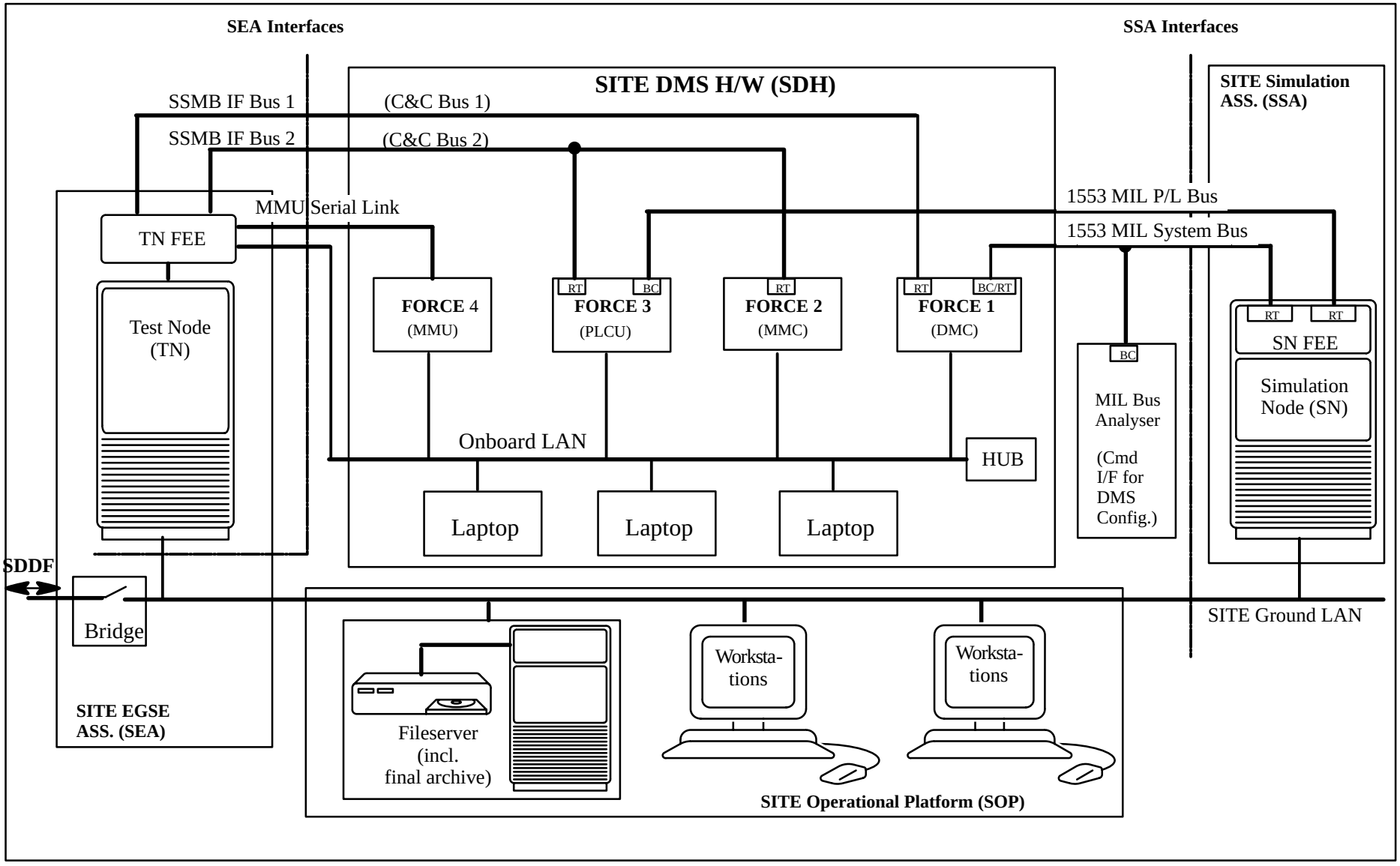

FIGURE 7.4–1 SITE BLOCK DIAGRAM

DaimlerChrysler Aerospace, Bremen – All Rights Reserved – Copyright per DIN 34

7.5 RACK LEVEL TEST FACILITY

The Rack Level Test Facility is considered as the formal verification tool for functional and operational tests of the payload to system interfaces before integration into the Columbus laboratory or prior to shipment to KSC for integration into the MPLM. This facility represents the physical, functional and operational environment of payloads within the APM flight configuration.

After the APM launch, the RLTF is the one and only reference facility reflecting the on–orbit interface configuration between European payloads and the APM. The RLTF will already be available for the initial launch payloads to verify the European ISPRs prior to installation into the APM and will be maintained throughout APM operations for the verification of follow–on payload.

Note: The RLTF could be modified to allow the verification of external payloads accommodated on an External Payload Adapter (ExPA) or centre aisle payloads connected to a SUP but this is currently not supported. *End of note*

The RLTF capabilities provide:

- payload–to–system interface verification for European APM payloads
- payload related system level product development, integration and verification

Following major RLTF capabilities are envisaged:

- representation of all APM system functions relevant for payload system level operations
- simulation capability of complementary European APM payloads
- accommodation of one ISPR for tests
- accommodation of class 1 payloads in flight configuration representative location
- resource allocation to payloads
- measurement of resources consumption and status data
- processing of selected payload housekeeping data including payload status and health data
- control and monitoring of test execution
- preparation and execution of operations procedures from APM / ODF
- archiving of test results
- capable of initial and follow–on payloads verification
- interface to payload EGSE to release science data
- capable of being used for payload testing and ’engineering support’ activities such as procedure verification, troubleshooting, etc.

DaimlerChrysler Aerospace, Bremen – All Rights Reserved – Copyright per DIN 34

The RLTF set–up will not cover audible noise, micro gravity and EMC verification. Also the RLTF does not support measurement of weight and centre of gravity.

The RLTF test configuration is depicted in Figure 7.5–1.

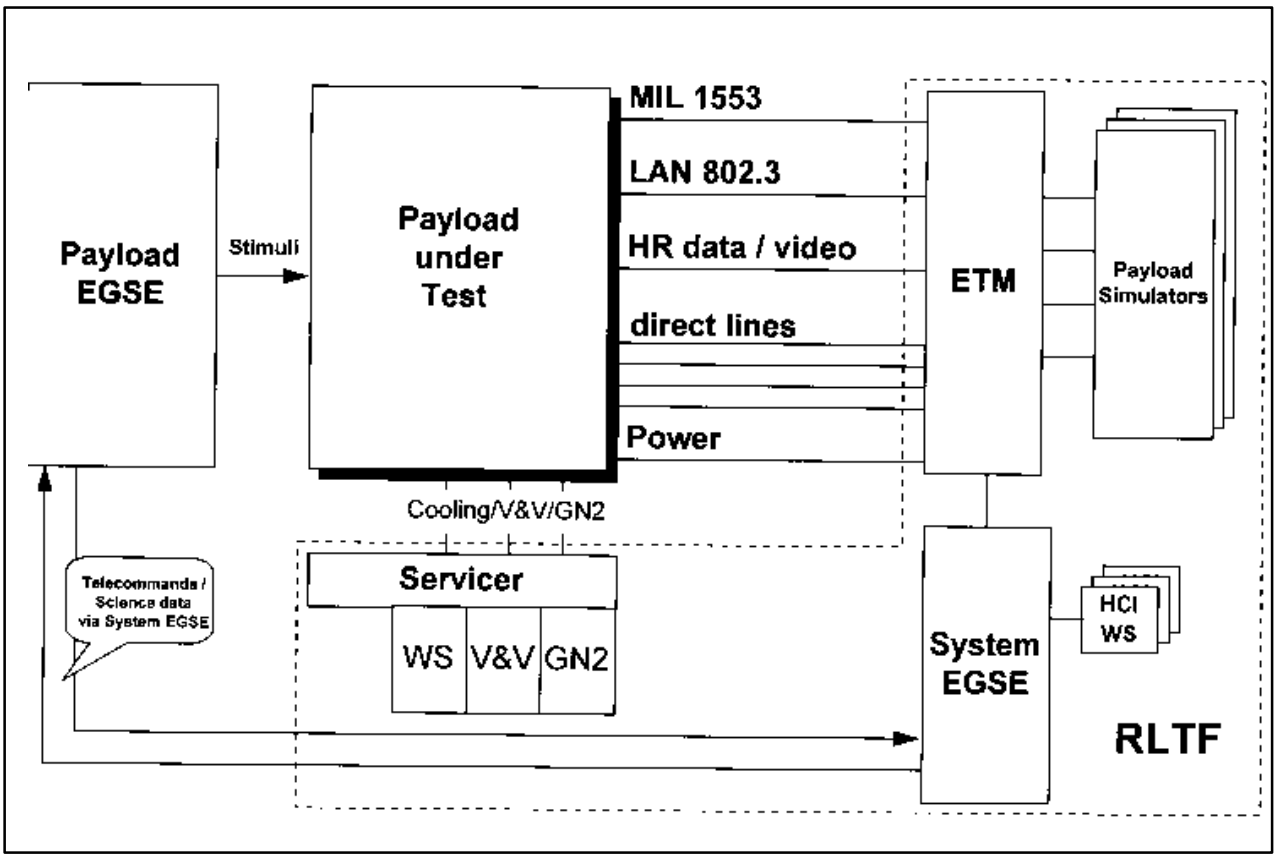

FIGURE 7.5–1 RLTF TEST CONFIGURATION

The RLTF represents all APM system functions relevant to support payload accommodation and payload operations as defined in the ISPR ICD:

- payload thermal control and heat removal
- payload vacuum / venting facility
- nitrogen distribution
- electrical power to payload
- payload data management
- video provisions
- up / downlink of payload data
- system emergency, warning, caution and safing (EWACS)
- payload fire detection and suppression

DaimlerChrysler Aerospace, Bremen – All Rights Reserved – Copyright per DIN 34

The RLTF represents APM flight H/W equivalent interfaces for class 1 payloads concerning electrical interfaces, data and communication interfaces, water interface, vacuum interface and N2 interface.

The necessary functions for payload accommodation and system level operations are provided by:

- APM Electrical Test Model (ETM) – provision of all electrical payload interfaces
- APM EGSE – to operate the RLTF
- RLTF Interface to Payload EGSE – transfer of payload specific data
- RLTF Payload Simulators – simulation of European complementary payload
- RLTF Payload Servicers –provision of cooling, vacuum & venting and GN2 to payloads
- Mechanical Accommodation of ISPRs – mechanical set–up for ISPR handling
  Note: the ISPRs will stay inside their individual Rack Handling Adapters while being tested on the RLTF
- RLTF Utility Interface Panel – physical connections from/to payload under test

Figure 7.5–2 shows the RLTF physical configuration.

In addition, payload related MDB preparation will be performed within the Columbus Ground Environment, i.e. the Software Design and Development Facility (SDDF).

DaimlerChrysler Aerospace, Bremen – All Rights Reserved – Copyright per DIN 34

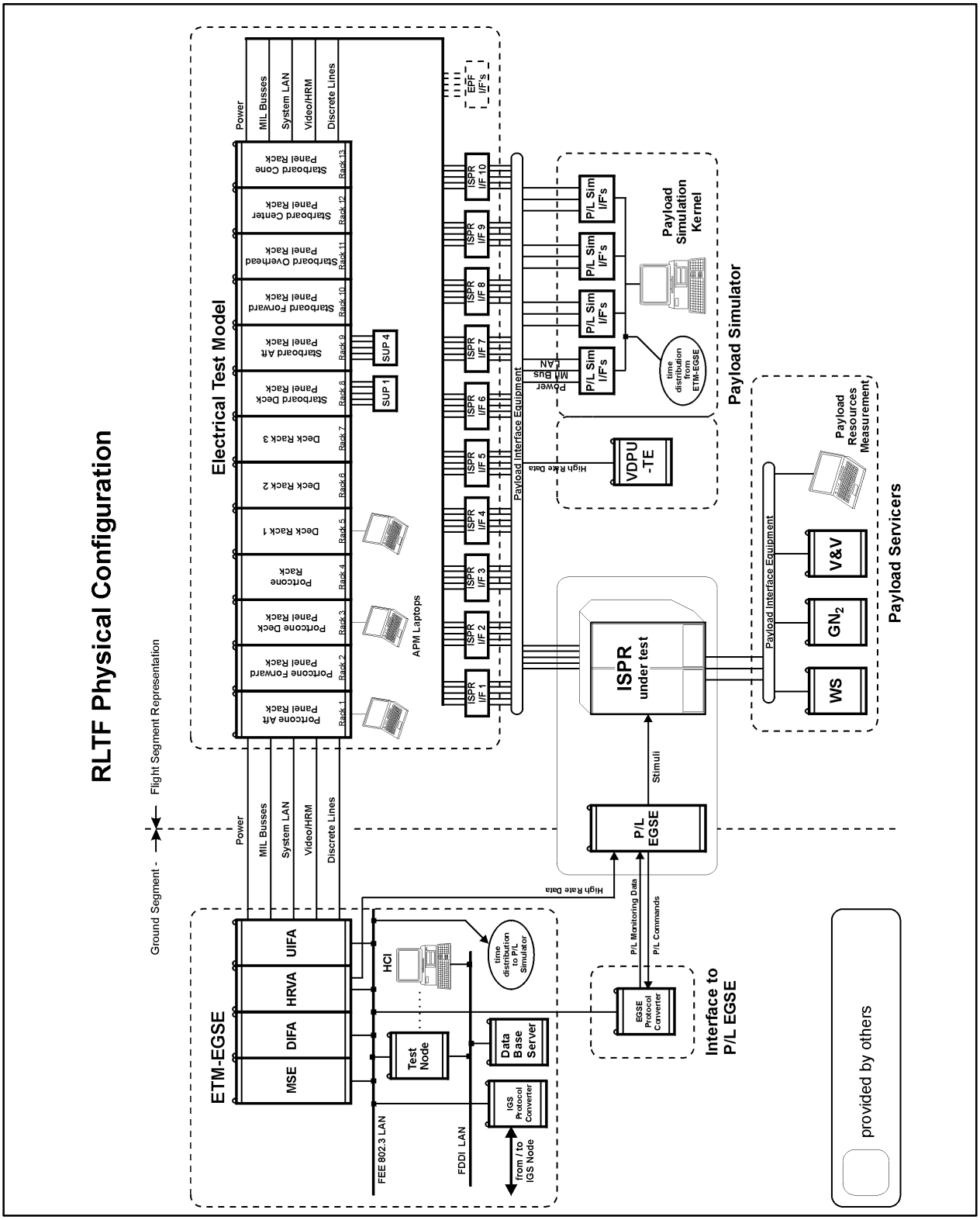

FIGURE 7.5–2 RLTF PHYSICAL CONFIGURATION

DaimlerChrysler Aerospace, Bremen – All Rights Reserved – Copyright per DIN 34

7.6 COMMON EQUIPMENT FOR USE IN GROUND OPERATIONS

TBD

DaimlerChrysler Aerospace, Bremen – All Rights Reserved – Copyright per DIN 34

8 PAYLOAD & LABORATORY SUPPORT EQUIPMENT, STANDARD PAYLOAD OUTFITTING EQUIPMENT AND TOOLS

A wide range of equipment is available to support payload outfitting and operations on the Space Station. Laboratory Support Equipment (LSE) consists of hardware which is permanently on orbit and can be shared by payloads. Standard Payload Outfitting Equipment (SPOE) consists of hardware that has been qualified for use on the Space Station and can be supplied to the payload developer for incorporation into the payload design. A TBD amount of SPOE will be provided free of charge by ESA for European payload usage. LSE and SPOE is being developed by various Space Station International Partners and the full range of hardware that will eventually be available is subject to change.

8.1 LABORATORY SUPPORT EQUIPMENT

Laboratory Support Equipment is required in order to outfit the APM into a real laboratory for scientific research. The LSE ranges from simple tools for on–orbit servicing or repair of facilities to sophisticated diagnostic devices and from storage containers for samples in controlled environmental conditions to complex self–standing facilities for the monitoring, enhancement and management of the laboratory environment.

Two major LSE racks are currently under development by ESA on behalf of NASA. These are the Microgravity Science Glovebox (MSG) and the Minus Eighty Degrees C Laboratory Freezer (MELFI) for ISS.

8.2 STANDARD PAYLOAD OUTFITTING EQUIPMENT (SPOE)

The basic structure for the accommodation of payloads is the payload rack (ISPR), which is described in section 5.1.1. The rack is normally supplied to the payload developer as an empty structure which can be outfitted to meet the needs of the specific payload complement which will fill the rack. The international partners (ESA, NASDA and NASA) of the Space Station Programme are developing a range of Standard Payload Outfitting Equipment (SPOE) for use by payload developers. SPOE hardware available from NASA is listed in TBD. SPOE hardware available from NASDA is listed in TBD.
ESA is developing a limited range of SPOE items which are described in the following sections. For more detailed information and procurement of these items ESA has to be contacted.

DaimlerChrysler Aerospace, Bremen – All Rights Reserved – Copyright per DIN 34

8.2.1 TURBO MOLECULAR PUMP

8.2.1.1 PUMP DESCRIPTION

For payloads that require a higher vacuum than is provided by the APM central vacuum system, it may be necessary to add vacuum pumps inside the rack. Two sizes of pump, the TPH 180 HM and the TMH 065, have been developed and qualified (except for the power control electronics). Both pumps are wide range turbomolecular pumps with two stages: a turbo molecular stage and a Holweck–like stage.
Figure 8.2.1.1–1, Turbo Molecular Pump TPH 180 HM Overall Dimensions, shows the overall dimensions of the TPH 180 HM and Figure 8.2.1.1–2, Turbo Molecular Pump TMH 065 Overall Dimensions, shows the overall dimensions of the TMH 065.

8.2.1.2 PUMP CHARACTERISTICS

The main characteristics of both pumps are shown in Table 8.2.1.2–1, Main Characteristics of the Turbo Molecular Pumps TPH 180 HM and TMH 065.

8.2.2 REMOTE POWER DISTRIBUTION ASSEMBLY

The RPDA will provide power distribution, power control, power status monitoring, overcurrent protection and conversion from 120 VDC to 28 VDC. The RPDA will consist of a standard housing and Exchangeable Standard Electronic Modules (ESEMs). Both the complete RPDA and the individual ESEM’s will be orbit replaceable units.

The 120 VDC ESEMs will provide outlets which are settable (protection current rating) to 1 A, 3 A, 5 A and 10 A.

The 28 VDC ESEMs will provide outlets of 10 A and 5 A.

DaimlerChrysler Aerospace, Bremen – All Rights Reserved – Copyright per DIN 34

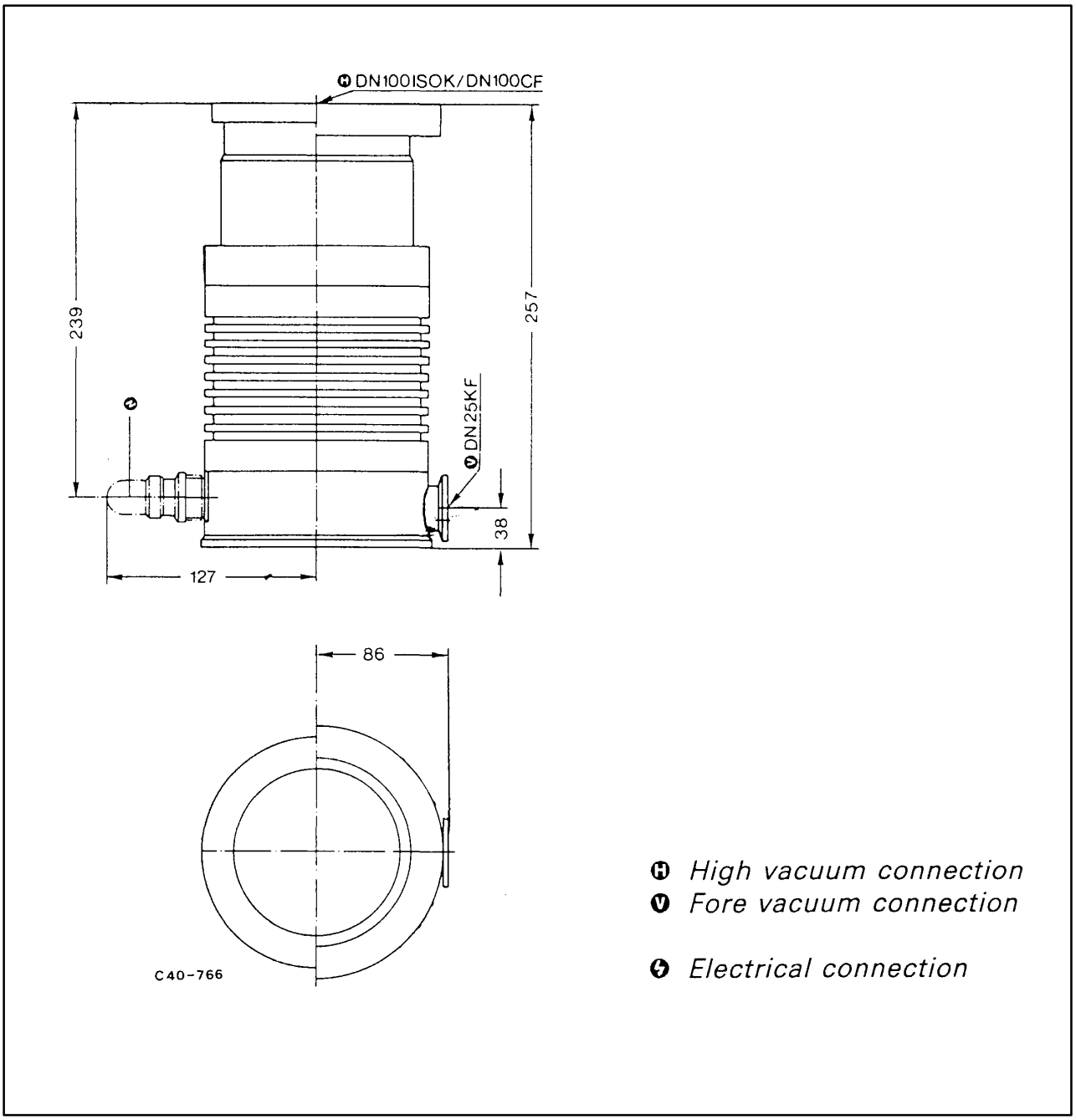

FIGURE 8.2.1.1–1 TURBO MOLECULAR PUMP TMH 180 OVERALL DIMENSIONS

DaimlerChrysler Aerospace, Bremen – All Rights Reserved – Copyright per DIN 34

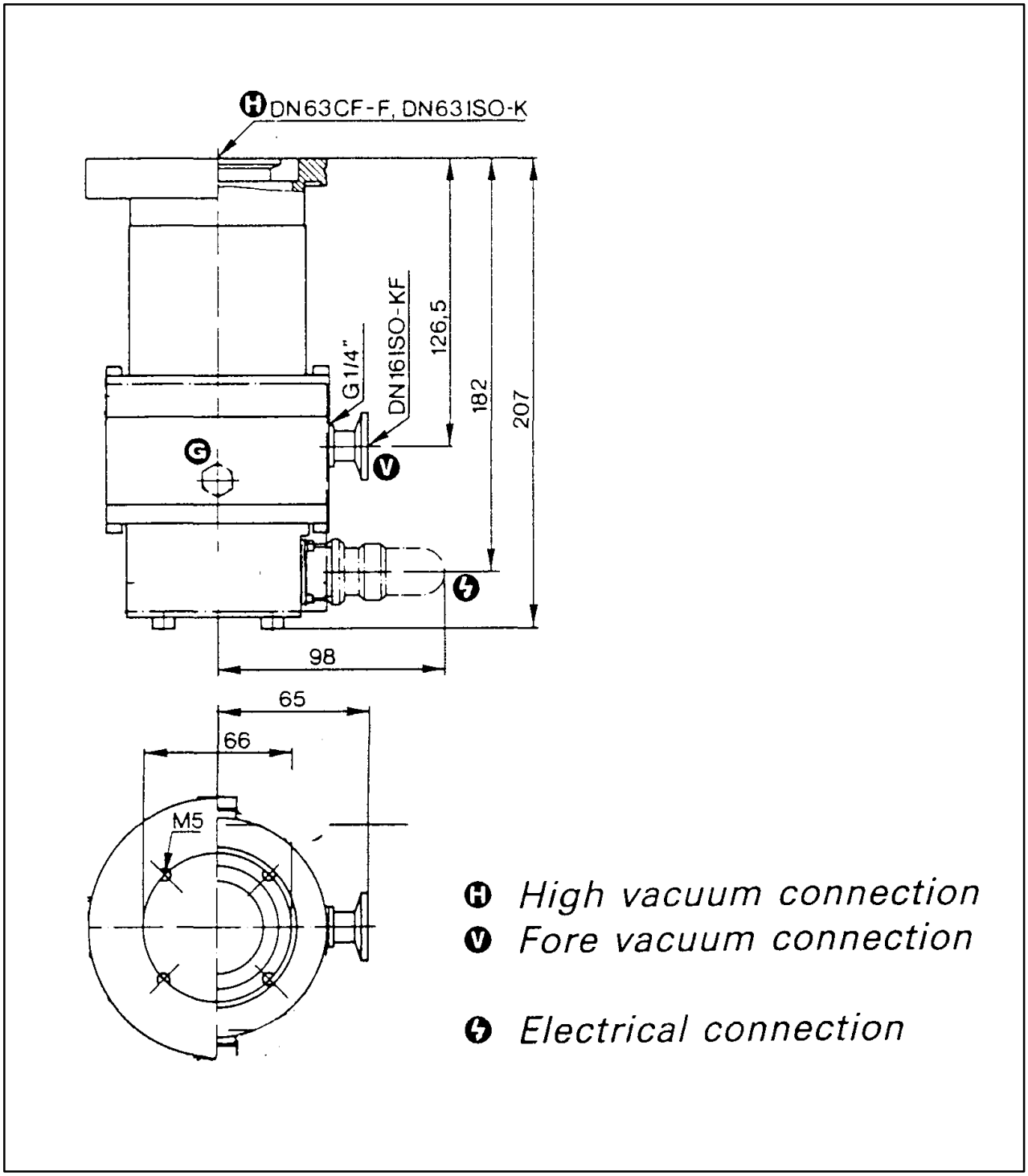

FIGURE 8.2.1.1–2 TURBO MOLECULAR PUMP TPH 065 HM OVERALL DIMENSIONS

DaimlerChrysler Aerospace, Bremen – All Rights Reserved – Copyright per DIN 34

TABLE 8.2.1.1–1 MAIN CHARACTERISTICS OF THE TURBO MOLECULAR VACUUM PUMP TPH 180 HM AND TMH 065

		TPH 180 HM	TMH 065
Part No.		PM P02 066	PM P02 591
HV connection diameter		DN 100 ISO–K	DN 63 ISO–K
Electronics & power unit		TCM 180	TCM 015
Volume flow rate for	N_2	170 litres/sec	56 litres/sec
	He	170 litres/sec	48 litres/sec
Compression ratio	N_2	> 10^{12}	> 10^{10}
	He	> 10^{8}	10^{7}
Ultimate pressure 10)	N_2	2* 10^{-9} mbar	< 4* 10^{-9} mbar
Nominal rotation speed		50000 / min	90000 / min
Stand–by rotation speed		33000 / min	60000 / min
Max. backing pressure	N_2	20 mbar 8)	20 mbar
Max. gas throughput	N_2	6 mbar l/s 8)	0.6 mbar l/s 7)
Cooling type		natural convection or cold plate attached to bottom	natural convection or cold plate attached to bottom
Cooling water		18 l/h 1)	5 l/h 2)
Input power:			
BP * : 10 mbar run–up		93 W 3)	57 W 4)
nominal speed		75 W	31 W
BP * : 1 mbar run–up		59 W 5)	57 W 6)
nominal speed		40 W	13 W
Run down time until stop 9): BP * : 10 mbar		≈ 3 min	≈ 3 min
BP * : 1 mbar		≈ 12 min	≈ 12 min
Mass with ISO–K flange		9.38 kg	2.51 kg

Legend:
*BP = Backing Pressure
1) 50 °C environmental temperature, 10 mbar backing pressure, 2 mbar l/s air throughput
2) 50 °C environmental temperature, 10 mbar backing pressure, 0.6 mbar l/s gas throughput
3) 10 mbar backing pressure, power adapted to a run–up time = 15 min
4) 10 mbar backing pressure, power adapted to a run–up time = 9 min
5) 1 mbar backing pressure, power adapted to a run–up time = 13 min
6) 1 mbar backing pressure, power adapted to a run–up time = 4 min
7) with rotary vane pump 1.5 m^3/h
8) with water cooling
9) without pressurization from high–vacuum side

8.2.3 AVIONICS AIR ASSEMBLY

The Avionics Air Assembly (AAA) will provide an air cooling capability of 1200 W for rack mounted payloads. It includes an air–to–water heat exchanger and a selectable –speed fan.

DaimlerChrysler Aerospace, Bremen – All Rights Reserved – Copyright per DIN 34

8.2.4 STANDARD PAYLOAD COMPUTER

The Standard Payload Computer (SPLC) will provide a modular and configurable data handling system for both rack mounted and external (unpressurized) payloads. The development will be based on the industrial standard VME bus and will be centred on a self standing processor board used as a main processing engine, with interfaces connected via a standardised local bus. The processor board will be equipped with a minimum set of interfaces and include a local bus to allow the addition of mezzanine interface boards. This configuration should be suitable for many simple payloads.

Where more complex functions are required further options are provided, i.e. a VME extension board providing the same local bus as that of the processor board and able to support additional mezzanine interface boards and specialized VME boards performing complex functions, e.g. video.

A payload developer will be able to select a configuration to suit the particular application. This may range from a single board to a pre–configured housing containing processor and interface boards. To support more complex configurations, the payload developer is at liberty to integrate independently developed VME boards.

8.3 TOOL KIT

A standard tool kit is available in the APM for intravehicular activities, which are primarily defined for maintenance and inspection activities, but which can also be used for payload operation purposes. The tools are stowed in tool boxes in special containers in the system racks D2 and D3.

Table 8.3–1, Contents of the Standard IVA Tool Kit, lists the contents of the standard tool kit.

TABLE 8.3–1 CONTENTS OF THE STANDARD IVA TOOL KIT.

	TOOLS	SIZE/TYPE
A	OPEN END WRENCHES	6 mm 8 mm 10 mm 12 mm 14 mm 16 mm 18 mm 20 mm
B	BOX WRENCHES	6 mm 8 mm 10 mm 12 mm 14 mm 16 mm 18 mm 20 mm

DaimlerChrysler Aerospace, Bremen – All Rights Reserved – Copyright per DIN 34

	TOOLS	SIZE/TYPE
C	HEXAGONAL SOCKET WRENCHES 3/8 in. drive	6 mm 8 mm 10 mm 12 mm 14 mm 16 mm 18 mm 20 mm 22 mm 24 mm
D	EXTENSIONS (in length) referred to C	30 cm long, 3/8 in. drive 15 cm long, 3/8 in. drive
E	”ALLEN” WRENCHES (made from a hexagonal rod to turn screws with an axial hexagonal socket in their head) 1/4 in drive	3 mm 4 mm 5 mm 6 mm 7 mm 8 mm 9 mm 10 mm 11 mm 12 mm
F	SCREW DRIVER SET	slotted tip set ”Phillips” set captive tip set jeweller’s screw driver set
G	HANDLES referred to C, E and F	4 in. ratchet wrench, 1/4 in square drive 4 in. ratchet wrench, 3/8 in square drive Torque wrench, 1/4 in. drive, 30–200 in–lb Torque wrench, 3/8 in. drive, 30–200 in–lb 1/4 in. drive handle 3/8 in. drive handle
H	ADJUSTABLE WRENCH	
I	CUTTING TOOLS & ACCESSORIES	file set wire cutters scissors razor knife
J	FIBRE OPTICS KIT	jacket strippers cleavers crimpers
K	IMPACT TOOLS	deadblow hammer
L	PUNCH SET	automatic punch
M	CLAMPS	vice grips long nose vice grip tweezers c–clamps hemostats

DaimlerChrysler Aerospace, Bremen – All Rights Reserved – Copyright per DIN 34

	TOOLS	SIZE/TYPE
N	PLIERS	long nose short nose round nose cable cutters wire strippers
O	MISCELLANEOUS TOOLS	magnifying glass flashlight glue gun wire brush fibre brush
P	CONSUMABLES	duct tape wet and dry wipes velcro masking tape spare fasteners spare nuts and bolts wire

8.4 CREW SUPPORT EQUIPMENT

A variety of dedicated equipment is available to support crew activities. This Crew Support Equipment (CSE) can also be used for payload servicing. The following paragraphs describe CSE which may be relevant for payload operations.

8.4.1 HOUSEKEEPING/TRASH MANAGEMENT PROVISIONS

The ISS provides a service for the routine cleaning and trash management of the space station habitable element interiors and their contents. For routine housekeeping, the ISS provides the equipment and facilities required for cleaning and disinfection of the space station modules. The trash management provides collection, processing, and storage facilities for all acceptable trash. Some examples of the allowable trash include filters, papers, wet and dry wipes, various packaging, swabs, pipettes and gloves. Trash produced by the operation of a payload is the user’s responsibility. Non–allowable trash includes sharp objects that could puncture the trash compactor bag or items which could pose a chemical and/or biological hazard. For a list of allowable and non–allowable trash items, refer to TBD.

8.4.1.1 ROUTINE CLEANING/DISINFECTION

Routine housekeeping provides for the nominal cleaning of all the space station habitable element interiors and contents. Standard cleaning provisions such as tissues, wipes, sponges, detergents, and disinfectants are provided.

DaimlerChrysler Aerospace, Bremen – All Rights Reserved – Copyright per DIN 34

8.4.1.2 TRASH COLLECTION AND TRASH COMPACTION

Facilities and equipment are available to collect and store trash for the space station habitable elements, including payloads. Trash containers and/or receptacles are distributed throughout the station for temporary storage of trash. The containers are later transferred to the trash compactor system for volume reduction. All acceptable trash must be sized to enter through the trash compactor door, which opens to 10 by 12 inches wide. The trash compactor itself consists of a replaceable trash bag, which is removed and stored in the Mini Pressurized Logistics Module (MPLM) and then returned to Earth. The housekeeping/trash management subsystem can accommodate a TBD amount of acceptable payload waste.

8.4.1.3 PAYLOAD–UNIQUE HOUSEKEEPING AND TRASH MANAGEMENT

The payload community is responsible for containing and managing their trash because the ISS does not offer much in the way of trash management. Housekeeping and trash management which is not provided by the ISS is the responsibility of the user, including the following:

- Definition of user–unique housekeeping and trash management procedures
- Treatment of non–allowable trash (i.e., trash not accepted by the station's stowage areas), including odour control and biological stabilization
- Packaging and labelling of non–allowable trash. Hazardous waste shall be triple–contained.
- Stowage of non–allowable trash in user–allocated volume

8.4.1.4 VACUUM CLEANER

The vacuum cleaner is designed to remove dust and debris (wet and dry) from the various surfaces of the habitable area of the space station and is capable of collecting and retaining up to 12 fluid ounces of non–contained liquid. It functions as a cleaning tool for routine housekeeping tasks, including filter cleaning. The vacuum cleaner has the specific requirement of cleaning the 70 μm mesh screens that precede the HEPA filters in the air revitalization system. The unit is designed for ease of use, handling and bag changeout, and meets human factors design requirements.

8.4.2 MOBILITY AIDS AND RESTRAINTS

The mobility aids and restraints include equipment restraints and personal restraints. The equipment restraints are located in stowage drawers for general use and consist of anchors, tethers, equipment restraints, and equipment transfer containers. The personal restraints provide comfort and support to a crew member. They include mobility aids (handrails), long–duration foot restraints, short–duration foot restraints and torso restraints. Each of these is portable and snaps into the rack seat track. Figure 8.4.2–1, Mobility Aids and Restraints, illustrates the various mobility aids and restraints. The seat track is the method of attachment for the mobility aids and restraints.

DaimlerChrysler Aerospace, Bremen – All Rights Reserved – Copyright per DIN 34

This Figure is TBD

FIGURE 8.4.2–1 MOBILITY AIDS AND RESTRAINTS

8.4.2.1 EQUIPMENT RESTRAINTS

The anchor snaps into the seat track and the tether locks onto it. The tether can be attached to any free equipment which needs to remain near the payload. The equipment restraint is a 1.5 x 100 inches belt made of TBD (probably nomex), which can be wrapped around a large piece of equipment. It is equipped with a handle to aid a crew member in moving the material. Both a small and large equipment transfer container are available to carry miscellaneous items around the station. The small container has a 6 x 6 inches base and is 8 inches deep. The large container is 6 x 10 x 12 inches. Both are made of TBD (probably nomex).

8.4.2.2 PERSONAL RESTRAINTS

Handrails are used to support the crew during translation along the module corridor. They can also be used as a mounting/ fixation base for task performance, if this is done on a temporary basis and/or if no large forces will be applied.

Handrails are mounted on lateral and overhead racks. They are attached to the seat tracks and can be removed, if so required.

The short–duration foot restraints are foot loops which independently fit each foot. They snap onto the handrails and the handrails snap onto the seat track. These loops are designed primarily for short–term activities and crew members with socked feet.

The long–duration foot restraints come in two sizes: 20 inches for a half rack and 40 inches for a full rack. In each case the foot plates slide along a rail and lock into place so that each foot can position itself. The plates have a grid pattern into which the shoes lock. They are also equipped with a loop for socked feet. These foot restraints are illustrated in Figure 8.4.2.2–1, Foot Restraint.

The torso restraint is worn by the crew member like a belt. At the member’s side are telescopic anchors which attach to the seat track.

DaimlerChrysler Aerospace, Bremen – All Rights Reserved – Copyright per DIN 34

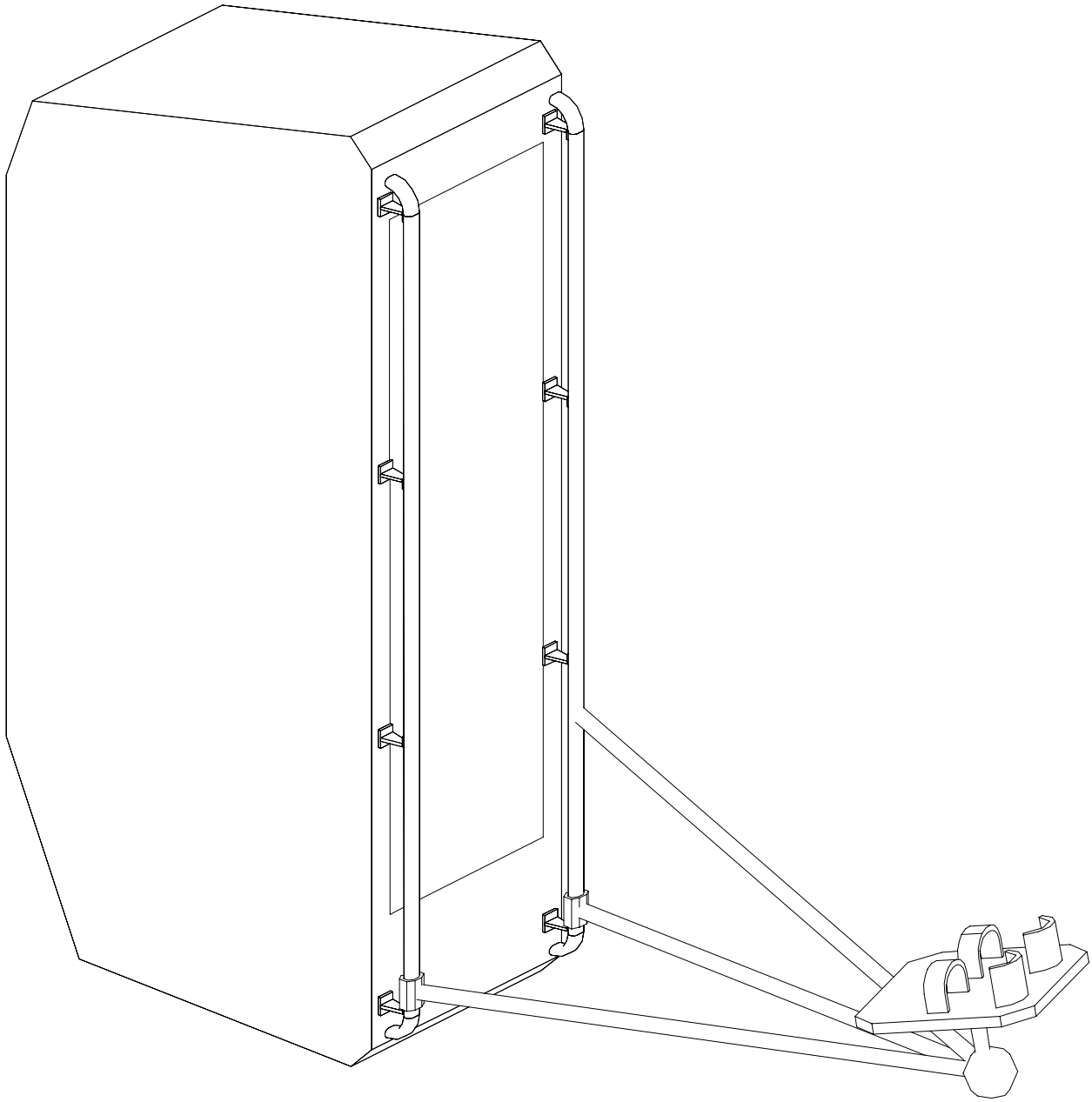

FIGURE 8.4.2.2–1 FOOT RESTRAINTS

DaimlerChrysler Aerospace, Bremen – All Rights Reserved – Copyright per DIN 34

9 SAFETY AND PRODUCT ASSURANCE REQUIREMENTS

Safety and Product Assurance requirements for ESA payloads are contained in applicable documents 2.1.1, 2.1.2, 2.1.3, 2.1.4, 2.1.5, 2.1.6, 2.1.7 and in the reference documents 2.2.6, 2.2.13. ■

DaimlerChrysler Aerospace, Bremen – All Rights Reserved – Copyright per DIN 34

10 GLOSSARY OF TERMS AND DEFINITIONS

Action

Actions are high level commands which provide for control at higher levels than elementary commands and AUTOMATED PROCEDURES (AP). They are preplanned, goal–oriented operations of either payload or subsystem. An Action may be linked to lower level actions reflecting the hierarchical decomposition of the on–board operation. On Action level all necessary pre–checks are carried out to ensure a safe implementation of an automated operation consistent with the actual mission phase and APM configuration.

Automated Procedure

An Automated Procedure (AP) constitutes a low level automated control of the subsystem and payload of the APM. The objective of the AP is to execute a particular subsystem or payload function. It contains verifiable, reusable processing statements (ordered collection of end item commands) necessary to perform a specific operation. They may be nested and implemented in a USER CONTROL LANGUAGE (UCL).

Nominally the AP will remain fixed and be executed in the frame of ACTION processing.

Command

A control signal from a terminal to perform an operation or to execute a program. Commands are defined on different levels:

- external commands from crew, ground or Core Station system
- Action commands (ACTION)
- Automated Procedures (AP)
- individual end item commands
- operational task commands (OPERATIONAL TASK)

Experiment

A series of measurements made in controlled conditions, to originate, calibrate or reproduce observations. Some measurements may be deferred until a specimen or data set is returned for terrestrial analysis.

Facility

An integrated collection of hardware items intended to provide some controlled conditions in which selected pre– and post–experiment processing and either complete experiments or parts of experiments can be undertaken.

Instrument

DaimlerChrysler Aerospace, Bremen – All Rights Reserved – Copyright per DIN 34

A hardware item used to make a limited range of specific measurements.

Laboratory

A collection of several facilities (or exceptionally a single facility) in which complete experiments in a particular scientific discipline can be undertaken.

Operational Task

An on–board stored and executable sequence of ACTIONS which are triggered according to their specified relative time tags. They are preplanned and activity–oriented operations for either the payload or the subsystem. On operational task level selected operational parameters may be defined and accessible for real–time modification, which are then passed on to lower level processes for execution.

Payload

A generic word used to identify a complement of instruments or facilities, space equipment and support hardware carried into space to accomplish a set of experimental activities.

Payload Rack

The standard ISPR in the APM used for experiments and stowage equipment.

Post Experiment Processing

Sample preservation or other activities undertaken following the completion of an experiment.

Pre Experiment Processing

Sample preparation or other activities undertaken before the commencement of an experiment.

User Control Language (UCL)

A high order user–oriented language providing the human user with a tool to exercise control over the APM both on–board and on–ground defined independently of the selected human/computer interface. It is tailored to the operational application of the APM flight configuration.

UCL is the language of the AUTOMATED PROCEDURES.

DaimlerChrysler Aerospace, Bremen – All Rights Reserved – Copyright per DIN 34

11 ACRONYMS

A

AC	Alternating Current
ACRV	Assured Crew Rescue Vehicle
ADA	(Software Language)
ADP	Acceptance Data Package
AIV	Assembly, Integration and Verification
AMS	Acceleration Mapping System
AOS	Advanced Orbital Systems
A–OOS	APM On–orbit Operations Summary
AP	Automated Procedure
APID	Application Identifier
APM	Attached Pressurized Module (formerly known as Columbus Orbital Facility,or COF)
APM–CC	APM Control Centre
APS	Automated Payload Switch
APT	Asynchronous Packet Transfer
AR	Acceptance Review
ARIS	Active Rack Isolation System
ARS	Air Revitalisation System
AR5	ARIANE 5
ASE	Ancillary Services Equipment
A–STP	APM Short Term Plan
ATU	Audio Terminal Unit
ATV	Automated Transfer Vehicle

B

BB	Broad Band
BC	Bus Controller
BER	Bit Error Rate
BOL	Begin of Life

C

C	Programming Language
CADU	CCSDS Channel Access Data Unit

DaimlerChrysler Aerospace, Bremen – All Rights Reserved – Copyright per DIN 34

CBM	Common Berthing Mechanism
C&C	Command and Control
C&T	Communication and Tracking
CCIR	International Radio Consultative Committee
CCITT	International Telegraph and Telephone Consultative Committee
CCSDS	Consultative Committee on Space Data Systems (Packet Telemetry Standard)
CDI	Configuration Data Item
CDR	Critical Design Review
CDT	Customer Documentation Tree
CFU	Colony Forming Unit
CGS	Columbus Ground System
CHeCS	Crew Health Care System
CHX	Condensing Heat Exchanger
CFU	Colony Forming Unit
CIFA	Circulation Fan Assembly
CM	Connection Matrix
CMD	Command
CM–DB	Configuration Management Data Base
CMU	Command and Monitoring Unit
CNC	Cryogenic Nitrogen Carrier
C/O	Checkout
COC	Cryogenic Oxygen Carrier
CoFR	Certificate of Flight Readiness
CoG	Centre of Gravity
CoM	Centre of Mass
COUP	Consolidated Operations and Utilization Plan
COT	Crew Operation Team
CP	ColdPlate
CPAH	COLUMBUS Payload Accommodation Handbook
CPL	Crew Procedure Language
CPU	Central Processing Unit
CPVS	Central Video Processing System
CRC	Cyclic Redundancy Check
CSA	Canadian Space Agency
CSE	Crew Support Equipment

DaimlerChrysler Aerospace, Bremen – All Rights Reserved – Copyright per DIN 34

CSMA/CD	Carrier Sense Multiple Access
C&T	Command and Tracking
CU	Copper
C&W	Caution and Warning
CWU	Crew Wireless Unit

D

DB	Data Base
DC	Direct Current
DCC	Dry Cargo Carrier
DDCU	DC to DC Power Converter Unit
DE	Development Environment
DFD	Data Flow Direction
DMC	Data Management Computer
DMS	Data Management (Sub)System

E

EAC	European Astronaut Centre
ECLSS	Environmental Control and Life Support (Sub)system
ECS	Environmental Control System
EDR	European Drawer Rack
EF	(JEM) External Facility
EGSE	Electrical Ground Support Equipment
ELM	(JEM) Experiment Logistics Module
EM	Engineering Model
EMC	Electromagnetic Compatibility
EMR	Electromagnetic Radiation
EOL	End of Life
EPDS	Electrical Power Distribution System
EPF	External Payload Facility
EPM	European Physiological Module
ES	Exposed Section
ES	Engineering Support
ESA	European Space Agency
ESEM	Exchangeable Standard Electronic Module

DaimlerChrysler Aerospace, Bremen – All Rights Reserved – Copyright per DIN 34

ESR	European Stowage Rack
ESS	EGSE System Software
EST	Engineering Support Team
ESTEC	European Space Research and Technology Centre
EVA	Extra–Vehicular Activity
EWACS	Emergency, Warning, Caution and Safing
ExPM	External Payload Mechanism

F

FAR	Flight Acceptance Review
FCT	Flight Control Team
FDIR	Failure Detection, Isolation and Recovery
FDS	Fire Detection and Suppression
FE	Front End
FEE	Front End Equipment
FEECP	Front End Equipment Control Protocol
FEIS	Front End Interface Software
FHCI	Flight Human Computer Interface
FGSE	Fluid Ground Support Equipment
FISU	Facility Internal Switching Unit
FLAP	Flight Automated Procedures
FM	Failure Management
FM	Flight Model
FMS	File Management System
FO	Fibre Optics
FRC	Facility Responsible Centre
FRR	Flight Readiness Review
FSL	Fluid Science Laboratory
FSS	Front End Specific Software
FTF	Functional Training Facility
FWD	Forward
FWDU	Flight Windows Definition Utility

G

GFI	Ground Fault Interrupter

DaimlerChrysler Aerospace, Bremen – All Rights Reserved – Copyright per DIN 34

GN&C	Guidance, Navigation and Control
GS	Ground Segment
GSE	Ground Support Equipment
GRD	Ground

H

HCI	Human/Computer Interface
HEPA	High Efficiency Particulate Attractor
HFE	Human Factors Engineering
HK	House Keeping
HRD	High Rate Data
HRDL	High Rate Data Link
HRDM	High Rate Demultiplexer
HRFM	High Rate Frame Multiplexer
HRM	High Rate Multiplexer
HRVA	High Rate and Video Assembly
H&S	Health and Status
HUB	Ethernet LAN Repeater (HUB)
HX	Heat Exchanger
HZE	High Z Energy
HW	Hardware

I

ICD	Interface Control Document
ICS	Inter Connection Station
ICT	IGS Control Team
IDRD	Increment Definition and Requirements Document
IEEE	Institute of Electrical, Electronical Engineers (Standardisation Organisation)
IEPT	Integrated Execute Planning Team
I/F	Interface
IFM	In– Flight Maintenance
IGS	Integrated Ground Subnet
IHX	Interloop Heat Exchanger
IMV	Inter–Module Ventilation
I/O	Input/Output

DaimlerChrysler Aerospace, Bremen – All Rights Reserved – Copyright per DIN 34

IOM	Increment Operation Manager
IP	Internet Protocol
IR	Infra–Red
IRD	Interface Requirements Document
IPT	Integrated Product Team
ISO	International Standard Organisation
ISPR	International Standard Payload Rack
ISS	International Space Station
ITA	Integrated Truss Assembly
IVA	Intra–Vehicular Activity
IVT	Interface Verification Test

J

JEM	Japanese Experiment Module
JSC	Johnson Space Center

K

KSC	Kennedy Space Center

L

LAN	Local Area Network
LEO	Low Earth Orbit
LFD	Logic Flow Diagram
LLC	Logical Link Connector
LRU	Line Replaceable Unit
LSB	Least Significant Bit
LSE	Laboratory Support Equipment
LSS	Life Support System
LST	Logistics Support Team
LT	Low Temperature
LTHX	Low Temperature Heat Exchanger
LTS	Low Temperature Section (of the APM Water Loop)

M

MAL	Master Alarm Light

DaimlerChrysler Aerospace, Bremen – All Rights Reserved – Copyright per DIN 34

MAMS	Microgravity Acceleration Measurement System
MBS	MRS Base System
MCS	MSS Control Equipment
MDB	Mission Data Base
MDL	Mid Deck Locker, NSTS Shuttle
MDM	Multiplexer / Demultiplexer
MDP	Maximum Design Pressure
MDPS	Micrometeoroid and Space Debris Protection System
MFC	Microgravity Facilities for Columbus
MGSE	Mechanical Ground Support Equipment
MLI	Multi Layer Insulation
MMA	Microgravity Measurement Assembly
MMC	Mission Management Computer
MMD	MSS Maintenance Depot
MME	Microgravity Measurement Electronics
MMI	Man Machine Interface
MMST	Mission Management Support Tools
MMT	Mission Management Team
MMU	Mass Memory Unit
MPLM	Multi Purpose Logistics Module
MPDU	Main Power Distribution Unit
MRS	Mobile Remote Servicer
MSB	Most Significant Bit
MSFC	Marshall Space Flight Centre
MSM	Manned Space and Microgravity
MSS	Mobile Servicing Centre
MST	Mission Sequence Test
MT	Moderate Temperature
MTHX	Moderate Temperature Heat Exchanger
MTL	Master Time Line
MTS	Moderate Temperature Section (of the APM Water Loop)

N

NASA	National Aeronautics and Space Administration
NASDA	National Space Development Agency of Japan

DaimlerChrysler Aerospace, Bremen – All Rights Reserved – Copyright per DIN 34

NB	Narrow Band
NFS	Network File System
NDT	Network Distributed Time
NIU	Network Interface Unit
NMC	Network Management Centre
NPP	Network Patch Panel
NSTS	National Space Transportation System
NTSC	National Television Standards Committee

O

OCF	Operations Control Facility
OCR	Operational Change Request
OD	Outer Diameter
ODF	Operations Data File
OES	Observed Exception Set
OMT	Operations Management Team
OOS	On–orbit Operations Summary
OPVR	Operations Preparation Validation Review
ORR	Operations Readiness Review
ORU	Orbit Replaceable Unit
OS	Operating System
OSC	Operations Support Center
OSE	Orbital Support Equipment
OSTP	Onboard Short–Term Plan
OTCM	ORU Tool Change–Out Mechanism

P

PAH	Payload Accommodation Handbook
PAI	Payload Analytical Integration
PAM	Port Aft Mounting
PAM	Payload Accommodation Manager
PAR	Preliminary Acceptance Review
PBA	Portable Breathing Apperatus
P/L	Payload
PCAR	Payload Complement Acceptance Review

DaimlerChrysler Aerospace, Bremen – All Rights Reserved – Copyright per DIN 34

PCB	Printed Circuit Board
PCIR	Payload Complement Integration Review
PCS	Portable Computer System (Laptop)
PCT	Payload Complement Test
PD	Payload Developer
PDGF	Power and Data Grapple Fixture
PDL	Payload Data Library
PDOT	Payload Development and Operations Team
PLD	Payload Data Library
PDM	Port Deck Mounting
PDR	Preliminary Design Review
PDS	Payload Data Sets
PDU	Power Distribution Unit
PED	Payload Developer
PEI	Payload Engineering Integration
PF	Pulse Frequency
PFE	Portable Fire Extinguisher
PFM	Pulse Frequency Modulation
PFM	Port Forward Mounting
PGVP	Payload Generic Verification Plan
PI	Payload Investigator
PIA	Payload Integration Agreement
PEIR	Post Increment Evaluation Report
PIM	Payload Integration Manager
PIT	Payload Integration Team
PLCU	Payload Control Unit
PLM	Pressurized Logistics Module
PLMDM	US–Lab Payload Multiplexer / Demultiplexer
PM	(JEM) Pressurized Module
POCC	Payload Operation Control Centre
PODF	Payload Operations Data File
POIC	Payload Operation Integration Centre
POSIX	Operating System
PS	Pressurized Section
PTC	Passive Thermal Control

DaimlerChrysler Aerospace, Bremen – All Rights Reserved – Copyright per DIN 34

PUP	Partner Utilization Plan
PVP	Payload Verification Plan
PWR	Power (Electrical)
PWS	Portable Workstation

R

RFA	Rack Fan Assembly
RLTF	Rack Level Test Facility
RMS	Remote Manipulator System
RMS	Root Mean Square
RPDA	Remote Power Distribution Assembly
RPL	Real Packet Length
RR	Replanning Request
RS	Radiated Susceptibility
RT	Remote Terminal

S

SA	Subaddress
SAA	South Atlantic Anomaly
SAM	Starboard Aft Mounting
SAMMI2	(Software Language)
SDDF	Software Design and Development Facility
SDH	SITE DMS Hardware
SDM	Starboard Deck Mounting
SEA	SITE EGSE Assembly
SEU	Single Event Upset
SFM	Starboard Forward Mounting
SFP	Solar Flare Particles
SID	Short Identifier
SIMM	Simulation Model
SITE	Software Integration and Test Environment
SMM	System Mission Management
SOM	Starboard Overhead Mounting
SOP	SITE Operational Platform
SPC	Standard Processor Controller

DaimlerChrysler Aerospace, Bremen – All Rights Reserved – Copyright per DIN 34

SPDM	Special Purpose Dexterous Manipulator
SPOE	Standard Payload Outfitting Equipment
SPLC	Standard Payload Computer
SPP	Safing Power Panel
SR	Secondary Radiation
SRB	Service Request Bit
SRM	Science Reference Model
SS	Smoke Sensor
SSA	SITE Simulation Assembly
SSCC	Space Station Control Centre
SSMB	Space Station Manned Base
SN	Simulation Node
SSPC	Solid State Power Controller
SSRMS	Space Station Remote Manipulator System
SSTF	Space Station Training Facility
STD	Standard
STE	Special Test Equipment
STP	Short Term Plan
STS	Space Transportation System
SUP	Standard Utility Panel
S/S	Subsystem
S/W	Software
SWOP	Software Onboard Program

T

TAT	Trans Atlantic Transmission
TBC	To Be Confirmed
TBD	To Be Determined
TBS	To Be Specified
TC	Telecommand
TCS	Thermal Control System
TDRSS	Tracking and Data Relay Satellite System
TM	Telemetry
TM	Training Model
TMP	Turbo Molecular Vacuum Pump

DaimlerChrysler Aerospace, Bremen – All Rights Reserved – Copyright per DIN 34

TRDB	Test Result Data Base
TSP	Twisted Shielded Pair

U

UCL	User Control Language
UCP	Utility Connector Panel (for centre aisle P/L)
UDP	User Datagram Protocol
UHB	User Home Base
UIP	Utility Interface Panel
UIFA	Utility Interface Front–End Assembly
ULC	Unpressurized Logistics Carrier
UOP	User Operation Panel
UOT	User Operations Team
UPM	Ulitisation Programme Manager
USL	United States Laboratory
USOC	User Support and Operations Centre
UTC	Universal Time Correlated
UUT	Unit Under Test
UV	Ultra Violet

V

VCA	Video Camera Assembly
VCH	Video Camera Head
VCR	Video Cassette Recorder
VDC	Volts Direct Current
VDPU	Video / Data Processing Unit
VDS	Verification Data Sheets
VICOS	Verification, Integration and Check–Out System
VMN	Video Monitor
VTC	Vital Telemetry/Telecommand Computer

W

WIF	Worksite Interface
w/o	without
WPA	Water Pump Assembly

DaimlerChrysler Aerospace, Bremen – All Rights Reserved – Copyright per DIN 34

DaimlerChrysler Aerospace, Bremen – All Rights Reserved – Copyright per DIN 34